HS 252 - STANDARD ASSEMBLY TORQUES

TABLE OF CONTENTS

1 SCOPE 8
2 PURPOSE 8
3 DOCUMENT CONTROL 8
4 REFERENCES 8
5 WARNINGS 9
6 APPLICATIONS 9
6.1 APPLICATION NOTES 12
7 TORQUE TOLERANCES 13
8 ADHESIVES 13
9 HGT-80 STANDARD (SCREWS AND THREADED RODS - 80% PRELOAD)....13
10 HGT-50 STANDARD (SCREWS AND THREADED RODS - 50% PRELOAD)....15
11 HGT-35 STANDARD (SCREWS - 35% PRELOAD) 16
12 HGT-SS STANDARD (SET SCREWS)....17
13 HGT-LHCS STANDARD (LOW HEAD CAP SCREWS) 18
14 HGT-FT STANDARD (FITTINGS) 19
14.1 IMPORTANT NOTES.... 19
15 HGT-EL STANDARD (ELECTRICAL APPLICATIONS)....24
16 DRAWING SPECIFICATIONS 25
17 SUPPLIER RECOMMENDED TORQUE SPECIFICATIONS....27
17.1 HYDRAULIC MANIFOLDS – TORQUE VALUES FOR SCREWS 27
17.2 HYDRAULIC MANIFOLDS – TORQUE VALUES FOR ORIFICES 27
17.3 HOSE/PIPE CLAMPS – TORQUE VALUES FOR SCREWS 28
17.4 HYDRAULIC MOTORS – TORQUE FOR MOUNTING BOLTS 29
17.5 BOSCH REXROTH DBDS PRESSURE RELIEF VALVES 29
17.6 BLADDER ACCUMULATOR NECK ADAPTOR SPECIFICATIONS 30
17.7 HYDAC OIL LEVEL SIGHT GAUGE 30
17.8 HYDAC PRESSURE TRANSDUCERS 30
17.9 DANFOSS PRESSURE TRANSDUCER.... 30
17.10 NUMATICS AIR VALVE ASSEMBLY TORQUE SPECIFICATIONS 31

© 2021 Husky Injection Molding Systems Ltd.

NO INTELLECTUAL PROPERTY RIGHTS ARE GRANTED INCLUDING ANY LICENSE, IMPLIED OR OTHERWISE. ALL RIGHTS RESERVED.

Printed copies are uncontrolled.

17.10.1 Torque Specifications for Numatics 2012 & 2035 Air Valve Assemblies 31
17.10.2 Torque Specifications for Numatics ISO 1, 2 & 3 Air Valve Assemblies 32
17.11 HYDAC MALE PRESSURE TEST POINT 33
18 INTERNATIONAL STANDARDS TORQUE SPECIFICATIONS 34
18.1 ISO 6162:1994 - SPLIT FLANGE ASSEMBLIES 34
18.2 CAUTION 34
18.3 NOTES 34
19 PET MOLD AND HOT RUNNER SPECIAL TORQUE SPECIFICATIONS 34
19.1 CAM FOLLOWER TORQUE SPECIFICATIONS 35
19.2 EOAT TUBE RETAINER PIN TORQUE SPECIFICATION 35
19.3 COOLPIK VACUUM/BLOW PIN TORQUE SPECIFICATIONS 35
19.4 COOLPIK MOVING PUCK INSTALLATION TORQUE SPECIFICATION 36
19.5 COOLPIK PLATE MOUNTING TORQUE SPECIFICATION 36
19.6 MOLD/HOT RUNNER LIFT BARS MOUNTING SCREWS TORQUE APPLICATIONS 37
19.7 GIB/WEAR PLATE MOUNTING SCREWS TORQUE SPECIFICATION 37
19.8 NECK RING PLUGS TORQUE SPECIFICATION 37
19.9 STACK INSERTS TORQUE SPECIFICATION 37
19.10 TORQUE SPECIFICATION FOR WATER MANIFOLDS TO SLIDES 38
19.11 TORQUE SPECIFICATION FOR SLIDE TO CONNECTING BARS 38
19.12 TORQUE SPECIFICATION FOR EOAT ASSY. TO ROBOT 38

TABLE OF FIGURES

Figure 1 – Husky General Torque (HGT) - Standard Applications (# 1 to 8) 10
Figure 2 – Using Hex Tool Adapter to Access Mold Mounting Screws 12
Figure 3 – Individual Torque Specifications 25
Figure 4 – Husky General Torque Chart 26
Figure 5 – Numatics 2012 & 2035 Air Valve Assemblies 31
Figure 6 – Numatics ISO 1, 2 & 3 Air Valve Assemblies 32
Figure 7 – EOAT Tube Retainer Pin Torque Specification 35
Figure 8 – Moving Puck Assembly Installation Torque Specification 36
Figure 9 – COOLPIK Assembly on machine Plenum 36

© 2021 Husky Injection Molding Systems Ltd.

NO INTELLECTUAL PROPERTY RIGHTS ARE GRANTED INCLUDING ANY LICENSE, IMPLIED OR OTHERWISE. ALL RIGHTS RESERVED.

Printed copies are uncontrolled.

TABLE OF TABLES

Table 1 – Husky General Torque (HGT) - Standard Applications 10
Table 2 – Adhesive Selection for Soft Joint Applications 13
Table 3 – HGT-80 Metric Fasteners 13
Table 4 – HGT-80 Imperial Fasteners 14
Table 5 – HGT-50 Metric Fasteners 15
Table 6 – HGT-50 Imperial Fasteners 15
Table 7 – HGT-35 Metric Fasteners 16
Table 8 – HGT-35 Imperial Fasteners 16
Table 9 – HGT-SS Metric Set Screws 17
Table 10 – HGT-SS Imperial Screws 17
Table 11 – HGT-LHCS Metric Low Head Cap Screws 18
Table 12 – HGT-FT ORFS Tube Ends 20
Table 13 – HGT-FT ORFS Hose Ends (Manuli Hose Fittings) 20
Table 14 – HGT-FT SAE and BSPP Ends 21
Table 15 – HGT-FT JIC Ends 21
Table 16 – HGT-FT NPT and BSPT Plugs and Fittings 22
Table 17 – HGT-FT Flareless Tube Ends 22
Table 18 – HGT-FT SAE Plugs 22
Table 19 – HGT-FT Bulkhead Locknuts 22
Table 20 – HGT-FT BSPP Plugs 23
Table 21 – HGT-FT Metric Plugs 23
Table 22 – HGT-EL Metric and Imperial Screws, Mounting Hardware (Electrical Applications) 24
Table 23 – HGT-EL Heater Bands (Electrical Applications) 24
Table 24 – HGT-EL Solid State Relays (Electrical Applications) 25
Table 25 – HGT-EL Premolded Cables (Electrical Applications) 25
Table 26 – HGT-EL Electrical Cabinet Door Ground Stud (Electrical Applications) 25

© 2021 Husky Injection Molding Systems Ltd.

NO INTELLECTUAL PROPERTY RIGHTS ARE GRANTED INCLUDING ANY LICENSE, IMPLIED OR OTHERWISE. ALL RIGHTS RESERVED.

Printed copies are uncontrolled.

Table 27 – Torque for Hydraulic Valves Mounting Bolts 27
Table 28 – Torque for Orifices on Hydraulic Manifolds 27
Table 29 – Torque for Stauff or Hydac Hose/Pipe Clamps Mounting Bolts 28
Table 30 – Torque for Stopflex Hose Bands Mounting Bolts 28
Table 31 – Heavy-Duty Hose Clamp (T-Bolt Style) 29
Table 32 – Torques for Hydraulic Motors Mounting Bolts 29
Table 33 – Bosh Rexroth DBDS Pressure Relief Valves 29
Table 34 – Bladder Accumulator Neck Adaptor Specifications 30
Table 35 – Numatics 2012 & 2035 Air Valve Assemblies 31
Table 36 - Numatics ISO 1, 2 & 3 Air Valve Assemblies 32
Table 37 - Code 61 Split Flange Assemblies 34
Table 38 - Code 62 Split Flange Assemblies 34
Table 39 – CAM Follower Torque Specifications 35
Table 40 – COOLPIK Vacuum/Blow Pin Torque Specifications 35
Table 41 – Mold/Hot Runner Lift Bars Mounting Screws Torque Specifications 37
Table 42 – Neck Ring Plugs Torque Specifications 37

REVISION LOG

Document Last Saved	8/20/2021 4:03:00 PM	By User	Duckett, Ian (Milton)
		Approved By	(see reviewers below)

*****NOTE:** this document has a duplicate copy that is published to www.husky.co.
All future revisions must be posted to www.husky.co ***

Rev.	Remarks	Edited	Reviewed
69	Removed Adhesive info and moved to HS 897 – Adhesive Standard. Left Torque/Loctite info for clamp fasteners.	Ian Duckett (2021-08-20)	Ian Duckett (2021-08-20)
68	Section 17.08 Torque values added for new Hydac PT HPN 9247632	Mrinal Patra (2020-11-20)	Samsir Tanary (2020-11-20)
67	Lubrication notes added to section 14 - Torque values for fittings (HGT-FT)	Fred Mazzia (2020-06-17)	Konrad Pach (2020-06-17)
66	Section 14 Torque values for fittings (HGT-FT) reviewed and updated: Section 14.1 relocated and revised to clarify assembly lubrication practices. Tables 12, 13, 14, 15, 18 and 19 updated as per the latest industry standards from Parker and Manuli. Section 17.11 added: Torque value for male pressure test point specified as per latest Hydac catalog.	Fred Mazzia (2020-05-26)	Greg Schultz, Konrad Pach (2020-05-26)

© 2021 Husky Injection Molding Systems Ltd.

NO INTELLECTUAL PROPERTY RIGHTS ARE GRANTED INCLUDING ANY LICENSE, IMPLIED OR OTHERWISE. ALL RIGHTS RESERVED.

Printed copies are uncontrolled.

65	ORFS hose end fittings specifications: Increased torque values in table 13. Note: Previous torque values were too low especially for the smaller sizes and failed a pull test audit. Manuli torque values for nut tightening have been tested and approved. Warning: Husky torque specifications apply to lubricated parts while Manuli's apply in dry conditions. As a result, Husky exceeds Manuli's recommended preload. DLO Details 2015 specifications: Sheet 1: Added Spade terminal "S0" and "S8" Code. Sheet 6: HPN 7404990 updated AWG and Torque value. HPN 5832899 updated AWG value. Sheet 8: Added * Larger termination screws Sheet 10: HPN 2172625 added load side termination details Sheet 11: Added HPN 2351717 Sheet 12: Added HPN 6344019 Sheet 14: Added HPN 8425223	Fred Mazzia (2020-04-07)	Greg Schultz, Craig Fleetwood and Endel Mell (2020-04-07)
64	DLO Details 1933 table updated to reflect current product usage along with torque value consolidation - See section 15 or DLO Details (English) 1937 or DLO Details (Chinese) 1937 specifications	Fred Mazzia (2019-09-13)	Craig Fleetwood and Endel Mell (2019-09-13)
63	DLO device torque specifications changes (DLO Details 1933) - See section 15 or HGT-EL DLO	Fred Mazzia (2019-08-26)	Craig Fleetwood and Endel Mell (2019-08-26)
62	Unit changed from ft-lb to in-lb in Table 22 - HGT-EL Metric and Imperial Screws, Mounting Hardware (Electrical Applications) to align with other tables and tooling in use	Fred Mazzia (2019-07-03)	Craig Fleetwood (2019-07-03)
61	HF and Cxx stopper code notes updated in HGT-EL DLO	Craig Fleetwood / 2019-01-21	Endel Mell / 2019-01-21
60	Section 17.6 Added value for 2.5" G2 Section 17.5 Updated table for DBDS relief valves	Greg Schultz / 2018-06-06	Samsir Tanary / 2018-06-06
59	Added Section 17.10 for Numatics air valve assemblies	Jacob Dick / 2018-05-31	Jeff Gorniak / 2018-05-31
58	Section 17.8 updated. Old Hydac pressure transducer (HPN 3875996) replaced with new (HPN 7980938)	Fred Mazzia / 2018-03-14	Konrad Pach / 2018-03-14
57	Added torques for Stopflex hose bands and heavy-duty hose clamp (T-Bolt style)	Fred Mazzia / 2017-08-08	Sany Yak, Andy Tingchaleun 2017-08-08
56	Added torque for electrical cabinet door ground stud	Fred Mazzia / 2017-01-31	Harpreet Singh / 2017-01-31
55	Updated as per SR 51455: Added note/picture for Cold Half and Hot Runner Mounting to Machine Platen in Husky General Torque (HGT) - Standard Applications	Kevin Sun / 2017-01-23	Adrian Looije / 2017-01-23
54	Updated as per SR 50799: Added sections 19.9, 19.10, 19.11, 19.12. Updated Sections 19.5, 19.6, 19.7, 19.9. Replaced and moved the table from section 19.7 to section 19.8	Jashan Gill / 2016-09-14	B.Jacovich, / 2016-09-14
53	Added torque specifications for Premolded Cables, Electrical Applications). Bookmarks to multiple tables added. Table for HGT-35 specifications updated (Stainless steel A2, socket head cap screw application added)	Fred Mazzia / 2016-05-26	Chiragkumar Patel, Steve Ertl, Herbert Liu / 2016-05-26
52	Table for HGT-EL Heater Bands, Electrical Applications updated. Torque values for UNC # 1/4 - 20 spider straps and post terminal nut added. Torque values for Danfoss pressure transducers added (see section 17.9)	Fred Mazzia / 2016-04-21	Florin Dome / Bei Bei Cui / Edem de Youngster 2016-04-14
51	Added torque specifications for Neck Ring Plugs	Jashan Gill / 2015-12-21	Derek McCready / 2015-12-21
50	Section 15 – HGT-EL Heater Bands, Electrical Applications updated. Torque value applied to ground stud nut specified.	Fred Mazzia / 2015-09-30	Florin Dome / Bei Bei Cui / 2015-09-30

© 2021 Husky Injection Molding Systems Ltd.

NO INTELLECTUAL PROPERTY RIGHTS ARE GRANTED INCLUDING ANY LICENSE, IMPLIED OR OTHERWISE. ALL RIGHTS RESERVED.

Printed copies are uncontrolled.

49	Section 4 – References updated for HGT 80, 50 and 35 torque calculations (units of measure added)	Fred Mazzia / 2015-07-24	Herbert Liu / 2015-07-24
48	Torque value for solid state relay added	Fred Mazzia / 2015-06-05	Endel Mell / 2015-06-05
47	2739013 CAM follower torque specifications updated	Jashan Gill / 2014-12-12	Adrian Looije / 2014-12-12
46	Table 1 updated and new Figure 1 added to clarify Husky General Torque Standard Applications (#1 to 8)	Fred Mazzia / 2014-10-10	Hakim Boxwala / 2014-10-10
45	Torque values for Watlow heater bands added	Fred Mazzia / 2014-08-27	Bill McGinness / 2014-08-27
44	Updated torque values for Watlow heater bands, torque values for Hydac oil level indicators added (see section 17.7), torque values for Hydac pressure transducers added (see section 17.8). HGT-EL DLO updated as per latest master	Fred Mazzia / 2014-08-21	Jesus Garcia / Kevin Kelly / Mirek Kowalczyk / Craig Fleetwood / 2014-08-21
43	Updated torque values for HGT-LHCS (Low Head Cap Screws)	Travis Betourney / 2014-08-11	HR Product Development / SR 41583 / 2014-08-06
42	Section 19.1	David Gosine-Brown / 2014-02-26	Jashan Gill / 20114-02-26
41	Baumuller torque values in HGT-EL DLO updated to reflect mid-range torque values	Fred Mazzia / 2014-01-28	Craig Fleetwood / 2014-01-28
40	Minor addition to sheet 6 in HGT-EL DLO as per manufacturing request	Fred Mazzia / 2013-11-08	Craig Fleetwood / 2013-11-08
39	HGT-LHCS (Low Head Cap Screws) specifications added (section 13). Warning section added (section 5)	Fred Mazzia / 2013-10-24	John Penner / 2013-10-24
38	Section 13 updated (HGL-EL). Torque values for DLO related connections removed and consolidated into a separate document: HGT-EL DLO	Fred Mazzia / 2013-09-18	Craig Fleetwood / Martin VanOosterom / Endel Mell / 2013-09-18
37	Updated torque values for COOLPIK blow/vacuum pins in section 19.3 . Reference SIR 105554	Nelson Tran / 2013-05-15	Guoming Li / 2013-05-15
36	Torque values for heater bands added/updated	Fred Mazzia / 2013-03-04	Shan Sathananthan / 2013-03-04
35	Added note that states: “this document has a duplicate copy that’s published to www.husky.ca, all future revisions must be posted to www. husky.ca”	Steve Leach / 2012-11-01	Fred Mazzia / 2012-11-01
34	Reference to Ampco 18 mounting screws removed	Fred Mazzia / 2012-09-10	Bill Jacovich / 2012-09-10
33	Added screw interchangeability notes in tables 4, 5, 6, and 8. Added screw interchangeability warning in section 5	Nelson Tran / 2012-05-31	Kevin Said / 2012-05-31
32	Added new Section 17 for PET Mold and Hot Runner Special Torque Applications	Xiao Li / 2012-02-13	Colangelo Robert Petrovic Predrag Anand Ish Lee Allan
31	Tables under section 15.8 reformatted (bladder accumulator neck adaptor specifications)	Fred Mazzia / 2012-02-10	Nadia Lucivero / 2012-02-14
30	Torque values for accumulator neck adaptors added	Fred Mazzia / 2011-12-21	Mrinal Patra / Frank Goetz 2011-12-21
29	Application notes (section 5.1) reviewed and updated: Torque values for high temperature applications (>150°C) statement clarified	Fred Mazzia / 2011-08-17	Jazz Virk / 2011-08-17
28	HGT-EL torque values for Breakers, fuses and lugs updated	Fred Mazzia / 2011-07-05	Andy Tingchaleun / 2011-07-05
27	Baumueller BM44XX Servo Drive Torque values added	Adrian Vucovan / 2011-04-26	Fred Mazzia / 2011-04-26
26	Torque values for SAE plugs reviewed and updated	Fred Mazzia / 2011-03-31	Chris Huntington / David Gay 2011-03-31
25	CAM follower torque values have been in Section 15.7	Masoum Mosmer / 2011-01-10	Jonah Finkelstein / 2011-01-10

© 2021 Husky Injection Molding Systems Ltd.

NO INTELLECTUAL PROPERTY RIGHTS ARE GRANTED INCLUDING ANY LICENSE, IMPLIED OR OTHERWISE. ALL RIGHTS RESERVED.

Printed copies are uncontrolled.

24	Torque values added to HGT-EL Lugged Connections - Electrical Applications	Fred Mazzia / 2011-01-07	Konrad Pach / 2011-01-07
23	Torque values for SAE plugs updated	Fred Mazzia / 2010-12-06	Gilles Lacome / 2010-12-06
22	Torque values for Siemens 5SY series breaker added	Fred Mazzia / 2010-11-09	Andy Tingchaleun / 2010-11-09
21	Torque values for Woehner and Ferraz Shawmut fuse holder added	Raj Hariharan 2010-11-04	Ryan Monteath 2010-11-04
20	Torques for Bosch Rexroth DBDS pressure relief valves added (see section 17.5)	Fred Mazzia / 2010-07-15	Mirek Kowalczyk / 2010-07-15
19	Lubricants section removed (transferred to HS 609)	Fred Mazzia / 2010-06-18	Srdjan Mucibabic / 2010-06-18
18	Section 7.1, gearbox oil added	D.Blagojevic / 2010-04-12	Fred Mazzia
17	Hoist ring torquing requirements updated (SR 13841)	Fred Mazzia / 2010-03-04	Predrag Petrovic
16	Remove note in revision 15	Kim Vong / 2010-01-27	Fred Mazzia
15	Add note for 4mm socket option for M10 (see section 10, B note)	Kim Vong / 2010-01-05	Mike Matak
14	Updated 'Table 1 – Husky General Torque Standards Applications': HR and Mold Liftbars with M30 installations to use HGT-35 – SR13141	Ish Anand / 2009-08-13	Petrovic, Predrag Mastrotto, Dan deBoer, Steve
13	Updated 'Table 1 – Husky General Torque Standards Applications': HR Liftbars to use HGT-50 as well – SR13141	Ish Anand / 2009-07-27	Petrovic, Predrag Mastrotto, Dan deBoer, Steve
12	Torques for electrical components added. References to "Husky Classes" added (e.g. Unbrako, Holokrome, YFS, etc. socket head cap screws).	Nevin Harbin / 2009-07-21 Fred Mazzia / 2009-07-06	Jaroslaw Paszun / 2009-07-22 Morgan Hayward / 2009-07-06
11	Added applications notes for adhesives usage and selection (section 7.2.1 and 7.2.2 added)	Benjamin Wong 2007-10-01	Derek Mackie 2007-10-02
10	Table 1 and application notes (section 5.1) updated to clarify the default preload (HGT-80, 50 or 35). Drawing specifications section updated (see section 14). Torque table shown on assembly drawings replaced by a note referring to the HS 252.	Fred Mazzia / 2007-09-10	Derek Mackie Mike Thweatt
9	Approved hydraulic oils specified in HS 207. Reference to HS207 added to "Lubricants for General Application" section (Table 2). Note: table 2 transferred to HS 609 (see revision 19)	Fred Mazzia / 2007-03-13	Srdjan Mucibabic
8	Added Manuli hose fittings, torque tolerances changed to +/-4% (section 6 updated)	L. Netherton / 2007-02-06	F. Mazzia
7	Torque values applied to threaded rod applications and maximum allowable preload on 10.9 fasteners	Fred Mazzia / 2005-11-01	Herbert Liu
6	New torque chart for AMPCO 18 applications added (see section 15.5), FFWR torque values for ORFS fittings added	Fred Mazzia / 2004-12-22	Allan McLellan, Bernd Hardy
5	Section 4 references added, section 6 torque tolerances added, tolerance values reviewed by tool supplier, document title changed.	Fred Mazzia / 2004-05-02	Engineering Managers
4	New standard template used, torque values for SAE plugs updated, bulkhead locknut torque values added, torque for BSPT fittings and plugs added, lubricant section modified, torque tolerances added, etc.	Fred Mazzia / 2004-04-16	Scott Carroll Frank Goetz Bernd Hardy
3	Torque values for grade 10.9 and 12.9 screws consolidated, torque values for hydraulic applications and split flanges added, drawing specifications section updated, etc.	Fred Mazzia / 2003-04-25	N/A
2	New format, new part numbers for FGL-2 grease, updated notes and units of measure	Fred Mazzia / 2002-08-20	N/A
1	Published to Site	Fred Mazzia / 2002-08-13	N/A
0	Original Issue	Fred Mazzia / 2002-05-13	N/A

© 2021 Husky Injection Molding Systems Ltd.

NO INTELLECTUAL PROPERTY RIGHTS ARE GRANTED INCLUDING ANY LICENSE, IMPLIED OR OTHERWISE. ALL RIGHTS RESERVED.

Printed copies are uncontrolled.

1 SCOPE

HGT (Husky General Torque) is a general torque standard that applies to threaded connections that do not have their respective torque values indicated on the drawing. Any other torque values such as the supplier's recommended torque specifications specified in Section 17 or any other deviations from the general standard must be individually specified on the drawing. Any deviations from this standard must be justified by calculations.

2 PURPOSE

To provide a list of general torque values and lubrication practices to be used on Husky product.

3 DOCUMENT CONTROL

Revisions to this document shall be authorized by Corporate Operations.

4 REFERENCES

The torque values specified in this document come from the following Industry Standards, Suppliers Catalogs and/or formulae:

<table>
<tr><td>HGT-80 Metric Fasteners</td><td rowspan="6">T = K.F.d
- Torque T in Newton-meter
- Coefficient of friction μ = 0.12
- Torque coefficient K (0.15 ≤ K ≤ 0.17)
- Induced screw load F in Newton
- Nominal diameter d in meter
- ISO 898-1 (grades 12.9 & 10.9) and ASTM A574</td><td rowspan="6">Standard proofload ratios:
80, 50 and 35%.
E.g. 80% preload means that the torque will produce enough energy to achieve 80% of what the bolt is capable of without permanent deformation.</td></tr>
<tr><td>HGT-80 Imperial Fasteners</td></tr>
<tr><td>HGT-50 Metric Fasteners</td></tr>
<tr><td>HGT-50 Imperial Fasteners</td></tr>
<tr><td>HGT-35 Metric Fasteners</td></tr>
<tr><td>HGT-35 Imperial Fasteners</td></tr>
<tr><td>HGT-SS Metric Set Screws</td><td colspan="2">ISO 898/5-1980 Table 5 and ASTM F912-1986 Table 2</td></tr>
<tr><td>HGT-SS Imperial Screws</td><td colspan="2">ASTM F912-1986</td></tr>
<tr><td>HGT-LHCS Metric Screws</td><td colspan="2">Torque values provided by manufacturer</td></tr>
<tr><td>HGT-FT ORFS Tube Ends</td><td colspan="2">Parker Catalog 4300 (April 2017)</td></tr>
<tr><td>HGT-FT SAE and BSPP Ends</td><td colspan="2">Parker Catalog 4300 (April 2017)</td></tr>
<tr><td>HGT-FT ORFS Hose Ends</td><td colspan="2">Manuli Hydraulics catalog 2020</td></tr>
<tr><td>HGT-FT JIC Ends</td><td colspan="2">Parker Catalog 4300 (April 2017)</td></tr>
<tr><td>HGT-FT NPT and BSPT Plugs and Fittings</td><td colspan="2">Parker Catalog 4300 (April 2017)</td></tr>
<tr><td>HGT-FT Flareless Tube Ends</td><td colspan="2">Parker Catalog 4300 (April 2017)</td></tr>
<tr><td>HGT-FT SAE Plugs</td><td colspan="2">Parker Catalog 4300 (April 2017)</td></tr>
<tr><td>HGT-FT Bulkhead Locknuts</td><td colspan="2">Parker Catalog 4300 (April 2017)</td></tr>
<tr><td>HGT-FT BSPP Plugs</td><td colspan="2">Former Luxembourg Machine torque standard (LTML111)</td></tr>
<tr><td>HGT-FT Metric Plugs</td><td colspan="2">Former Luxembourg Machine torque standard (LTML111)</td></tr>
<tr><td>HGT-EL Metric and Imperial Screws</td><td colspan="2">Electric Components Supplier</td></tr>
<tr><td>Torque for Hydraulic Valves Mounting Bolts</td><td colspan="2">Torque values provided by manufacturer</td></tr>
<tr><td>Torque for Orifices on Hydraulic Manifolds</td><td colspan="2">Former Luxembourg Machine torque standard (LTML111)</td></tr>
<tr><td>Torque for Hose/Pipe Clamps Mounting Bolts</td><td colspan="2">Former Luxembourg Machine torque standard (LTML111)</td></tr>
<tr><td>Torques for Hydraulic Motors Mounting Bolts</td><td colspan="2">Torque values provided by manufacturer</td></tr>
<tr><td>Code 61 Split Flange Assemblies</td><td colspan="2">ISO 6162-1994</td></tr>
<tr><td>AMPCO 18 Applications</td><td colspan="2">Torque values provided by manufacturer</td></tr>
<tr><td>Code 62 Split Flange Assemblies</td><td colspan="2">ISO 6162-1994</td></tr>
</table>

© 2021 Husky Injection Molding Systems Ltd.

NO INTELLECTUAL PROPERTY RIGHTS ARE GRANTED INCLUDING ANY LICENSE, IMPLIED OR OTHERWISE. ALL RIGHTS RESERVED.

Printed copies are uncontrolled.

5 WARNINGS

Always use the correct parts and the proper torques. Incorrect fastener connections can dangerously weaken assemblies. Ensure that all safety information, instructions and warnings such as shown in the two examples below are read and understood before any operation or any maintenance procedures are performed.

CAUTION!
Mechanical hazard – risk of equipment damage. Use of improper torque can result in equipment damage. Consult the assembly drawings for the torque specifications before referring to the torque charts in this section.

WARNING!
Molten plastic spray hazard - risk of serious injury and equipment damage. If incorrectly sized screws are used, equipment damage may occur that could result in uncontained molten plastic spray. If replacing the screws, only use the screw sizes specified in the machine bill of material.

6 APPLICATIONS

HGT consists of seven torque standards HGT-80, HGT-50, HGT-35, HGT-SS, HGT-LHCS, HGT-FT and HGT-EL as shown in Table 1. For mechanical applications, screws are torqued to the HGT-

© 2021 Husky Injection Molding Systems Ltd.

NO INTELLECTUAL PROPERTY RIGHTS ARE GRANTED INCLUDING ANY LICENSE, IMPLIED OR OTHERWISE. ALL RIGHTS RESERVED.

Printed copies are uncontrolled.

80, HGT-50, HGT-35 or HGT-LHCS standards. For electrical applications, screws and other components are torqued to the HGT-EL standard. Set screws are torqued to the HGT-SS standard and fittings to the HGT-FT standard. Deviations from Husky General Torque Standards for Special PET Mold and Hot Runner applications are listed below and are cited in detail in Section 19.

19.1 CAM Follower torque specifications

19.2 EOAT Tube Retainer Pin torque specification

19.3 COOLPIK Vacuum / Blow Pin torque specifications

19.4 COOLPIK Moving Puck installation torque specification

19.5 COOLPIK Plate mounting torque specification

19.6 Mold/HR Liftbars mounting screws torque applications

19.7 Gib / Wear Plate mounting screws torque specifications

19.8 Neck Ring Plugs torque specifications

19.9 Stack Inserts Torque Specification

19.10 Torque Specification for Water Manifolds to Slides

19.11 Torque Specification for Slide to Connecting Bar

19.12 Torque Specification for EOAT Assy. to Robot

Figure 1 – Husky General Torque (HGT) - Standard Applications (# 1 to 8)

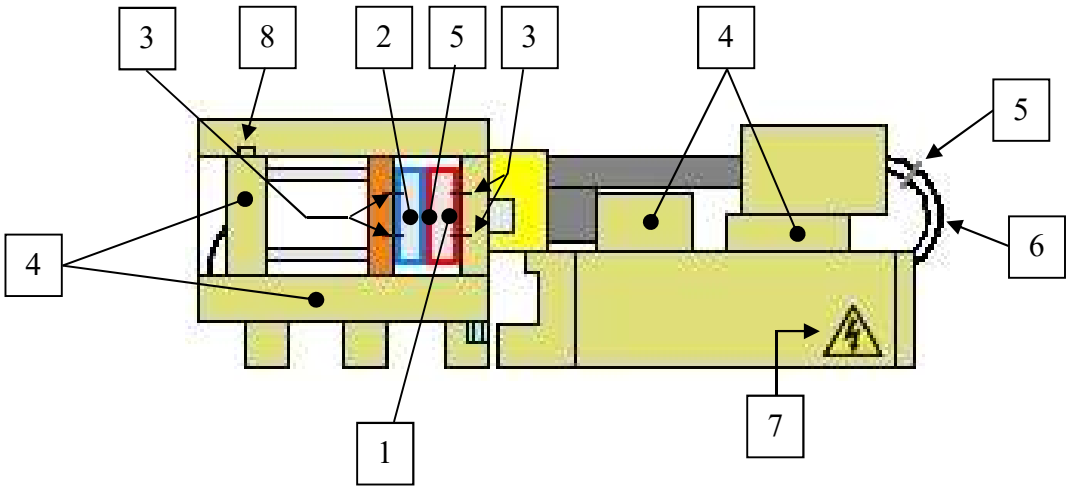

Table 1 – Husky General Torque (HGT) - Standard Applications

Application	Hardware	Base/Threaded Material	Torque Standard

© 2021 Husky Injection Molding Systems Ltd.

NO INTELLECTUAL PROPERTY RIGHTS ARE GRANTED INCLUDING ANY LICENSE, IMPLIED OR OTHERWISE. ALL RIGHTS RESERVED.

Printed copies are uncontrolled.

Mechanical	**Hot Runner Assemblies** 1	Screws and Threaded Rods	- DIN 912-12.9 SHCS* - DURLOK-12.9-UNB HHS - DIN 976-12.9 ROD	Steel Cast Iron	HGT-80
		Set Screws	- ISO 898/5-45H - ASTM F912	N/A	HGT-SS
		Low Head Cap Screws	- DIN 7984	N/A	HGT-LHCS
	Cold Half Assemblies (including Cavity plate assembly) 2	Screws and Threaded Rods	- DIN 912-12.9 SHCS* - DURLOK-12.9-UNB HHS - DIN 933 & 931-10.9 HHCS - DIN 976-12.9&10.9 ROD	Steel Cast Iron	HGT-50
		Set Screws	- ISO 898/5-45H - ASTM F912	N/A	HGT-SS
		Low Head Cap Screws	- DIN 7984-10.9 LHCS	N/A	HGT-LHCS
	Cold Half and Hot Runner Mounting to Machine Platen 3	SHCS	- DIN 912-12.9 SHCS*	Cast Iron	HGT-50**
	Machine Assemblies 4	Screws and Threaded Rods	- DIN 912-12.9 SHCS* - DURLOK-12.9-UNB HHS - DIN 933 & 931-10.9 HHCS - DIN 976-12.9&10.9 ROD	Steel Cast Iron	HGT-50
		Set Screws	- ISO 898/5-45H - ASTM F912	N/A	HGT-SS
	All Assemblies Using a Weaker Base Material 5	Screws and Threaded Rods	- DIN 912-12.9 SHCS* - DURLOK-12.9-UNB HHS - DIN 933 & 931-10.9 HHCS - DIN 976-12.9&10.9 ROD - DIN 7991-10.9 FHCS - ISO 7380-10.9 BHCS - ASTM A574 SHCS	Cast Aluminum Aluminum Plate	HGT-35

* Referred to as "Husky Classes 1, 2, 3 & 4" in HS 258

** When using hex tool adapter to access mold mounting screws, no de-rating of torque value is required - See Figure 2

/… Continuing on next page

Application	Hardware	Base/Threaded Material	Torque Standard

© 2021 Husky Injection Molding Systems Ltd.

NO INTELLECTUAL PROPERTY RIGHTS ARE GRANTED INCLUDING ANY LICENSE, IMPLIED OR OTHERWISE. ALL RIGHTS RESERVED.

Printed copies are uncontrolled.

6 **Hydraulic, Lubrication, Air and Water**	Hose and Tube Fittings	- O-ring face Seal - JIC (37° Flared) - NPT, BSPP, Bite - SAE Straight Thread	N/A	HGT-FT
7 **Electrical**	Screws and other components	- Steel, Al& Cu, Brass screws	N/A	HGT-EL
8 **Hoist Rings**	Screws	- As supplied with Hoist Ring	N/A	Follow Supplier recommendation

Figure 2 – Using Hex Tool Adapter to Access Mold Mounting Screws

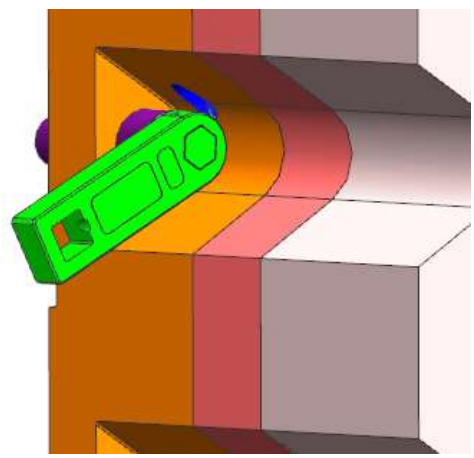

6.1 APPLICATION NOTES

- Washers are recommended for oversized holes and slots.
- Heavy washers (DIN 7349) are recommended for cast aluminum applications.
- The HGT-80 standard is recommended for the majority of Hot Runner products: These high strength and/or high fatigue applications use grade 12.9 bolts that will not crush, gall, warp or fracture the joint material under preload (e.g. high-strength alloy steel).
- The HGT-50 standard is recommended for the majority of Machine and Mold product applications. HGT-50 ensures that the area below the screw head does not bear into the seating material and the threads do no shear upon torquing.
- The HGT-35 standard is recommended for those applications where the yield strength of the base material would otherwise be exceeded under a 50% preload. An example is clamping a cantilevered section such as a belt clamp that is subject to bending stress.
- Torque values for high temperature applications (>150°C) should be calculated and individually specified on the drawing as required. If no values are indicated on the drawing,

© 2021 Husky Injection Molding Systems Ltd.

NO INTELLECTUAL PROPERTY RIGHTS ARE GRANTED INCLUDING ANY LICENSE, IMPLIED OR OTHERWISE. ALL RIGHTS RESERVED.

Printed copies are uncontrolled.

the general HGT standard should be used (e.g. HGT-50 for Machine and Mold applications, HGT-80 for Hot Runner applications).

- In all applications the joint must be designed to carry the load safely and without separation.
- Screw sizes and torque values must be supported by calculations for externally applied loads that are subjected to fatigue action such as pressurized vessels.
- Approved lubricants and coolants can be found in the HS 609 standard.
- Approved oils can be found in the HS 207 standard.
- When maintenance or service requires the replacement of screws, it is recommended that they be the same ones specified in the machine Bill of Material. Due to the interchangeability between some metric and imperial screws, incorrect sizes may provide insufficient bolt preload over time.

7 TORQUE TOLERANCES

The more accurate the method of controlling tightness the more of the strength of the fastener can be utilized. The tolerance values specified in this standard pertain to the tool's accuracy and not the induced fastener's load that is affected by other variables such as lubrication, clamped materials, temperature, etc. For example, assembly torque wrenches should be calibrated to stay within +/-4% when applying HGT-50, 80 or 35 and the fastener's induced load accuracy can be expected to range from +/- 10-20%.

8 ADHESIVES

Table 2 – Adhesive Selection for Soft Joint Applications - See **HS 897** – Adhesive Standard

9 HGT-80 STANDARD (SCREWS AND THREADED RODS - 80% PRELOAD)

The following torques must be applied to screws in order to produce the desired 80% preload.

Table 3 – HGT-80 Metric Fasteners

Grade 12.9 Fasteners Socket Head Cap Screw* (DIN912) Durlock Hex Head Cap Screw (UNB 12.9) Threaded Rod (DIN976)			
Size	Torque (+/- 4%)		Induced Screw Load (N)
	N-m	ft-lb	
M4	4.6	3.4	6800
M5	9.5	7.1	11000
M6	16	12	15600
M8	39	29	28400
M10	77	57	45000
M12	135	100	65000
M14	215	160	90000
M16	330	245	122000
M20	650	480	190000
M24	1100	810	273000
M30	2250	1660	435000
M36	3850	2840	634000
M42	6270	4630	870000
M48	8560	6320	1140000

© 2021 Husky Injection Molding Systems Ltd.

NO INTELLECTUAL PROPERTY RIGHTS ARE GRANTED INCLUDING ANY LICENSE, IMPLIED OR OTHERWISE. ALL RIGHTS RESERVED.

Printed copies are uncontrolled.

Table 4 – HGT-80 Imperial Fasteners

ASTM A574 Fasteners Imperial Socket Head Cap Screw			
Size	Torque (+/- 4%)		Induced Screw Load (N)
	N-m	ft-lb	
#8	5	4	7000
#10	7	5	8700
1/4	16	12	15800
5/16	35	25	26100
3/8**	60	45	38000
7/16**	95	70	53000
1/2	150	110	71000
5/8	290	210	108000
3/4**	500	360	160000
7/8	790	580	222000
1	1180	865	291000
1 1/8	1680	1240	367000
1 1/4	2400	1750	466000
1 3/8	3100	2300	555000
1 1/2	4100	3040	676000
1 3/4	6500	4800	911000

* Referred to as “Husky Classes 1, 2, 3, and 4” in HS 258.

** When maintenance or service requires the replacement of screws, it is recommended that they be the same ones specified in the machine Bill of Material. Due to the interchangeability between some metric and imperial screws, incorrect sizes may provide insufficient bolt preload over time.

© 2021 Husky Injection Molding Systems Ltd.

NO INTELLECTUAL PROPERTY RIGHTS ARE GRANTED INCLUDING ANY LICENSE, IMPLIED OR OTHERWISE. ALL RIGHTS RESERVED.

Printed copies are uncontrolled.

10 HGT-50 Standard (Screws and Threaded Rods - 50% Preload)

The following torques must be applied to screws in order to produce the desired 50% preload.

Table 5 – HGT-50 Metric Fasteners

Grade 12.9 and 10.9 Fasteners
Socket Head Cap Screw* (DIN912)
Hex Head Cap Screw (UNB 12.9, DIN933, DIN931)
Threaded Rod (DIN976)

Size	Torque (+/- 4%)		Induced Screw Load (N)
	N-m	ft-lb	
M4	3	2.2	4250
M5	6.2	4.6	8900
M6	10	7	9800
M8	25	18	17800
M10	53	40	31500
M12	95	70	47000
M14	130	95	56000
M16	220	160	85000
M18**	270	200	93000
M20	390	290	124000
M24	660	490	171000
M30	1300	960	272000
M36	2300	1700	396000
M42	3700	2700	544000
M48	5500	4000	714000

Table 6 – HGT-50 Imperial Fasteners

ASTM A574 Fasteners
Imperial Socket Head Cap Screw

Size	Torque (+/- 4%)		Induced Screw Load (N)
	N-m	ft-lb	
#8	3	2	4360
#10	4	3	5450
1/4	11	8	9900
5/16	22	16	16300
3/8**	40	30	24000
7/16**	60	45	33000
1/2	95	70	44000
5/8	180	135	68000
3/4**	310	230	100000
7/8	490	360	139000
1	750	550	182000
1 1/8	1040	770	230000
1 1/4	1480	1090	291000
1 3/8	1940	1430	347000
1 1/2	2580	1900	423000
1 3/4	4050	2990	570000

* Referred to as “Husky Classes 1, 2, 3, and 4” in HS 258.

** When maintenance or service requires the replacement of screws, it is recommended that they be the same ones specified in the machine Bill of Material. Due to the interchangeability between some metric and imperial screws, incorrect sizes may provide insufficient bolt preload over time.

© 2021 Husky Injection Molding Systems Ltd.

NO INTELLECTUAL PROPERTY RIGHTS ARE GRANTED INCLUDING ANY LICENSE, IMPLIED OR OTHERWISE. ALL RIGHTS RESERVED.

Printed copies are uncontrolled.

11 HGT-35 STANDARD (SCREWS - 35% PRELOAD)

The following torques must be applied to screws in order to produce the desired 35% preload.

Table 7 – HGT-35 Metric Fasteners

Grade 12.9, 10.9 and A2 Fasteners
Socket Head Cap Screw* (DIN912)
Socket Head Cap Screw*** (Stainless Steel, A2)
Hex Head Cap Screw (UNB 12.9, DIN933, DIN931)
Flat Head Cap Screw (DIN7991)
Button Head Cap Screw (ISO7380)

Size	Torque (+/- 4%)		Induced Screw Load (N)
	N-m	ft-lb	
M4	2.1	1.5	2980
M5	4	3	4800
M6	9	7	7800
M8	19	14	14200
M10	37	27	22000
M12	50	37	24500
M16	125	90	49000
M20	250	185	79000
M24	440	325	115000
M30	875	650	182000
M36	1530	1130	265000

Table 8 – HGT-35 Imperial Fasteners

ASTM A574 Fasteners
Imperial Socket Head Cap Screw

Size	Torque (+/- 4%)		Induced Screw Load (N)
	N-m	ft-lb	
#8	1	1	2670
#10	3	2	3100
1/4	7	5	5800
5/16	14	10	9800
3/8**	23	17	14200
7/16**	38	28	20000
1/2	58	42	26700
5/8	110	81	41000
3/4**	180	135	60000
7/8	300	220	83000
1	450	330	111000
1 1/8	620	460	138000
1 1/4	890	660	175000
1 3/8	1170	860	208000
1 1/2	1550	1140	254000
1 3/4	2450	1790	342000

* Referred to as “Husky Classes 1, 2, 3, and 4” in HS 258.

** When maintenance or service requires the replacement of screws, it is recommended that they be the same ones specified in the machine Bill of Material. Due to the interchangeability between some metric and imperial screws, incorrect sizes may provide insufficient bolt preload over time.

*** HGT-35 is the proper torque for stainless steel screws (strength of stainless steel screw is 70% of grade 10.9).

© 2021 Husky Injection Molding Systems Ltd.

NO INTELLECTUAL PROPERTY RIGHTS ARE GRANTED INCLUDING ANY LICENSE, IMPLIED OR OTHERWISE. ALL RIGHTS RESERVED.

Printed copies are uncontrolled.

12 HGT-SS STANDARD (SET SCREWS)

The following torques must be applied to set screws.

Table 9 – HGT-SS Metric Set Screws

ISO 898/5-45H Set Screws Metric Socket Set Screw (DIN913-14-15-16)		
Size	Torque (+/- 4%)	
	N-m	ft-lb
M3	0.9	0.66
M4	2.2	1.6
M5	4	3
M6	7.2	5.3
M8	17	12.6
M10	33	24
M12	54	40
M16	134	99
M20	237	175
M24	440	325

Table 10 – HGT-SS Imperial Screws

ASTM F912 Set Screws Imperial Socket Set Screw ANSI B18.3.1)		
Size	Torque (+/- 4%)	
	N-m	ft-lb
#5	1.1	0.8
#6	1.1	0.8
#8	2.7	2
#10	4	3
1/4	9.5	7
5/16	19	14
3/8	33	24
1/2	70	52
9/16	70	52
5/8	150	110
3/4	270	200
7/8	410	300
1	570	420

© 2021 Husky Injection Molding Systems Ltd.

NO INTELLECTUAL PROPERTY RIGHTS ARE GRANTED INCLUDING ANY LICENSE, IMPLIED OR OTHERWISE. ALL RIGHTS RESERVED.

Printed copies are uncontrolled.

13 HGT-LHCS STANDARD (LOW HEAD CAP SCREWS)

The following torques must be applied to low head cap screws.

Table 11 – HGT-LHCS Metric Low Head Cap Screws

Grade 10.9 Low Head Cap Screws Low Head Cap Screws (DIN 7984)		
Size	Torque (+/- 4%)	
	N-m	in-lb
M4	2.7	24
M5	5.4	48
M6	9.15	81
M8	22	195
M10	44	389
M12	77	682
M16	190	1681
M20	371	3284

© 2021 Husky Injection Molding Systems Ltd.

NO INTELLECTUAL PROPERTY RIGHTS ARE GRANTED INCLUDING ANY LICENSE, IMPLIED OR OTHERWISE. ALL RIGHTS RESERVED.

Printed copies are uncontrolled.

14 HGT-FT STANDARD (FITTINGS)

The following tables provide the recommended torque values required for the safe and effective operation of the fittings using a torque wrench or other methods such as “Turn From Finger Tight”, “Flats From Finger Tight” or “Flats from Wrench Resistance”. For TFFT or FFFT, the joint should be hand tightened snugly and then tightened with a wrench by the number of flats or turns indicated by the table. For “FFWR”, the joint should be tightened snugly with a wrench and then tightened again with the same wrench by the number of flats indicated by the table. The torque method of assembly is the preferred method of assembly. It reduces the risk of human error during assembly that is more prevalent in the “FFWR” method. To ensure the most accurate assembly of the fitting, it is strongly recommended that the torque method be utilized.

14.1 IMPORTANT NOTES

- O-rings must always be lubricated.
- Refer to the notes in red and the following symbols to determine if lubricant should be applied to threads.

Apply lubricant to threads

Do not apply lubricant to threads

- Values are for steel fittings in steel ports.
- For stainless steel fittings, please use the upper limit of torque range. Exclusion: NPT and BSPT fittings.
- For brass, aluminum (and other soft metals), decrease torque value by 35%. Exclusion: NPT and BSPT fittings.
- For NPT and BSPT elbows, never back off to achieve alignment.
- For ferrule (bite) fittings, manually screw the nut on the fitting body until finger tight. Continue to tighten the joint with a wrench by the number of flats indicated in the table. If the fitting body was used for ferrule pre-set, the nut must be re-tightened to the same fitting body used earlier in pre-set.
- Assembled parts (nut and adapter) must have identical plating.
- Torque values shown apply to the ends indicated by arrows.

© 2021 Husky Injection Molding Systems Ltd.

NO INTELLECTUAL PROPERTY RIGHTS ARE GRANTED INCLUDING ANY LICENSE, IMPLIED OR OTHERWISE. ALL RIGHTS RESERVED.

Printed copies are uncontrolled.

Table 12 – HGT-FT ORFS Tube Ends

O-ring Face Seal Tube Ends

SAE Dash Size	Thread Size Inch	Tube Side Torque * (+10% - 0) Nm (ft-lb)	FFWR Tube Nuts (min-max)	FFWR Swivel & Hose Ends (min-max)
-4	9/16 - 18	25 (18)	1/4 - 1/2	1/2 - 3/4
-6	11/16 - 16	40 (30)	1/4 - 1/2	1/2 - 3/4
-8	13/16 - 16	55 (40)	1/4 - 1/2	1/2 - 3/4
-10	1 -14	80 (60)	1/4 - 1/2	1/2 - 3/4
-12	1-3/16 - 12	115 (85)	1/4 - 1/2	1/3 - 1/2
-16	1-7/16 - 12	150 (110)	1/4 - 1/2	1/3 - 1/2
-20	1-11/16 - 12	205 (150)	1/4 - 1/2	1/3 - 1/2
-24	2 - 12	315 (230)	1/4 - 1/2	1/3 - 1/2
-32	2 1/2 -12	510 (375)	1/4 - 1/2	1/3 - 1/2

*** IMPORTANT: Recommended torques values are only applicable for nut tightening in dry conditions (no oil or lubrication on threads and sealing surfaces, only O-rings must be lubricated). For brass, aluminum (and other soft metals), decrease torque value by 35%. However, FFWR is the same.**

Table 13 – HGT-FT ORFS Hose Ends (Manuli Hose Fittings)

O-ring Face Seal

SAE Dash Size	Hose ID	Thread Size	Recommended Torque *		Rotation Angle (degrees)	FFFT Hose Ends
			Nm (0, +10%)	ft-lbs (0, +10%)		
-4	1/4"	9/16"-18	26	19	45°	3/4
-6	3/8"	11/16"-16	42	31	45°	3/4
-8	1/2"	13/16"-16	57	42	60°	3/4
-10	5/8”	1"-14	85	63	45°	1
-12	3/4"	1 3/16"-12	122	90	45°	3/4
-16	1"	1 7/16"-12	156	115	45°	3/4
-20	1 1/4"	1 11/16"-12	200	148	45°	3/4
-24	1 1/2"	2"-12	256	189	45°	3/4

*** IMPORTANT: Recommended torques values are only applicable for nut tightening in dry conditions (no oil or lubrication on threads and sealing surfaces, only O-rings must be lubricated).**

© 2021 Husky Injection Molding Systems Ltd.

NO INTELLECTUAL PROPERTY RIGHTS ARE GRANTED INCLUDING ANY LICENSE, IMPLIED OR OTHERWISE. ALL RIGHTS RESERVED.

Printed copies are uncontrolled.

Table 14 – HGT-FT SAE and BSPP Ends

Adjustable and Non-Adjustable SAE and BSPP Ends (Plugs excluded)				
SAE Dash Size	Thread Size Inch	Torque * (+10% - 0)		
		JIC, Ferrule Fittings	JIC, Ferrule & Pipe Fittings	Face Seal Fittings
		Adjustable 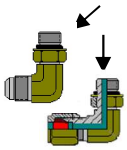	Non-Adjustable	Adjustable and Non-Adjustable 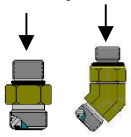
		Nm (ft-lb)	Nm (ft-lb)	Nm (ft-lb)
-4	7/16 - 20	20 (15)	29 (15)	20 (15)
-6	9/16 - 18	40 (30)	40 (30)	46 (35)
-8	3/4 - 16	70 (52)	70 (52)	80 (60)
-10	7/8 - 14	115 (85)	115 (85)	135 (100)
-12	1-1/16 - 12	185 (135)	185 (135)	185 (135)
-14	1-3/16 - 12	235 (175)	235 (175)	235 (175)
-16	1-5/16 - 12	270 (200)	270 (200)	270 (200)
-20	1-5/8 - 12	340 (250)	340 (250)	340 (250)
-24	1-7/8 - 12	415 (305)	415 (305)	415 (305)
-32	2-1/2 - 12	510 (375)	510 (375)	510 (375)

*** IMPORTANT: Lubricate threads before assembly. Values in chart are for plated steel fittings in steel ports. For stainless steel fittings, use the upper limit of torque range. For brass and aluminum, decrease torque value by 35%.**

Table 15 – HGT-FT JIC Ends

JIC (37 Deg Flared Tube) Ends

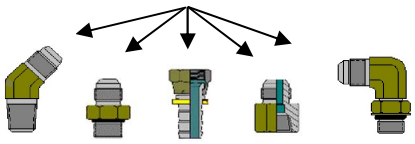

SAE Dash Size	Thread Size Inch	Assembly Torque * (+10% - 0) Nm (ft-lb)	Tube End FFWR	Hose End or Swivel Nut FFWR
4	7/16 - 20	18 (13)	2 1/2	2
6	9/16 - 18	30 (22)	2	1 1/2
8	3/4 - 16	57 (42)	2	1 1/2
10	7/8 - 14	81 (60)	1 1/2	1 1/2
12	1-1/16 - 12	115 (84)	1 1/2	1 1/4
14	1-3/16 - 12	135 (100)	1 1/2	1 1/4
16	1-5/16 - 12	160 (118)	1 1/2	1
20	1-5/8 - 12	230 (168)	1	1
24	1-7/8 - 12	265 (195)	1	1
32	2-1/2 - 12	360 (265)	1	1
40	3-12	Not Applicable	1	1

*** IMPORTANT: Torque values are for unlubricated carbon steel components and properly lubricated stainless-steel components.**

© 2021 Husky Injection Molding Systems Ltd.

NO INTELLECTUAL PROPERTY RIGHTS ARE GRANTED INCLUDING ANY LICENSE, IMPLIED OR OTHERWISE. ALL RIGHTS RESERVED.

Printed copies are uncontrolled.

Table 16 – HGT-FT NPT and BSPT Plugs and Fittings

NPT and BSPT Fittings and Plugs

Torque *

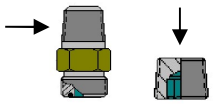

NPTF Inch	BSPT Inch	TFFT (min-max)
1/8-27	1/8-28	2 - 3
1/4-18	1/4-19	2 - 3
3/8-18	3/8-19	2 - 3
1/2-14	1/2-14	2 - 3
3/4-14	3/4-14	2 - 3
1 - 11-1/2	1 – 11	1.5 - 2.5
1-1/4 - 11-1/2	1-1/4 - 11	1.5 - 2.5
1-1/2 - 11-1/2	1-1/2 - 11	1.5 - 2.5
2 - 11-1/2	2 - 11	1.5 - 2.5

*** IMPORTANT: Carbon & stainless steel components: Apply lubricant to male pipe threads if not pre-applied. The first to two threads should be left uncovered to avoid system contamination.**

Table 17 – HGT-FT Flareless Tube Ends

Ferrule (Bite) Fittings

Torque *

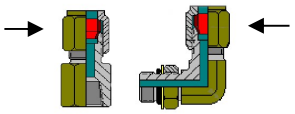

SAE Dash Size	Thread Size Inch	Nut TFFT (min-max)
4	7/16 - 20	1/6 - 1/4
6	9/16 - 18	1/6 - 1/4
8	3/4 - 16	1/6 - 1/4
10	7/8 - 14	1/6 - 1/4
12	1-1/16 - 12	1/6 - 1/4
14	1-3/16 - 12	1/6 - 1/4
16	1-5/16 - 12	1/6 - 1/4
20	1-5/8 - 12	1/6 - 1/4
24	1-7/8 - 12	1/6 - 1/4
32	2-1/2 - 12	1/6 - 1/4

*** IMPORTANT: Carbon steel components: Lubricate threads before assembly. No additional lubrication is required for stainless steel fittings as the nuts are pre-lubricated.**

Note: For final assembly of swivel nut fittings (R6BU, C6BU and S6BU), a 3/4 TFFT is required for all sizes.

Table 18 – HGT-FT SAE Plugs

SAE Straight Thread Plugs

SAE Dash Size	Thread Size	Torque * (+10% - 0)	
		Hollow Hex Plug	Hex Plug
	Inch	Nm (ft-lb)	Nm (ft-lb)
-2	5/16 - 24	7 (5.2)	10 (7.4)
-3	3/8 - 24	11 (8.1)	18 (13)
-4	7/16 - 20	20 (14.8)	29 (21)
-5	1/2 – 20	28 (20.7)	32 (23)
-6	9/16 - 18	40 (30)	40 (30)
-8	3/4 - 16	70 (52)	70 (52)
-10	7/8 - 14	115 (85)	115 (85)
-12	1-1/16 - 12	185 (135)	185 (135)
-14	1-3/16 - 12	235 (175)	235 (175)
-16	1-5/16 - 12	270 (200)	270 (200)
-20	1-5/8 - 12	340 (250)	340 (250)
-24	1-7/8 - 12	415 (305)	415 (305)
-32	2-1/2 - 12	510 (375)	510 (375)

*** IMPORTANT: Lubricate threads before assembly.**

Table 19 – HGT-FT Bulkhead Locknuts

Bulkhead Locknuts

SAE Dash Size	Torque * (+10% - 0)	
	O-ring Face Seal Ends	JIC or ferrule Ends
	Nm (ft-lb)	Nm (ft-lb)
4	20 (15)	18 (13)
6	34 (25)	35 (25)
8	75 (55)	65 (50)
10	115 (75)	115 (85)
12	180 (125)	180 (135)
14	230 (170)	230 (170)
16	270 (200)	270 (200)
20	330 (245)	330 (245)
24	365 (270)	365 (270)
32	Not Applicable	420 (310)

*** IMPORTANT: Torque values are only applicable for nut tightening in dry conditions**

© 2021 Husky Injection Molding Systems Ltd.

NO INTELLECTUAL PROPERTY RIGHTS ARE GRANTED INCLUDING ANY LICENSE, IMPLIED OR OTHERWISE. ALL RIGHTS RESERVED.

Printed copies are uncontrolled.

Table 20 – HGT-FT BSPP Plugs

BSPP Plugs	
Thread Size	Torque * (+10% - 0)
Inch	Nm (ft-lb)
1/8 - 28	13 (9.6)
1/4 - 19	30 (22)
3/8 - 19	60 (44)
1/2 - 14	80 (60)
3/4 - 14	140 (105)
1 - 11	200 (155)
1-1/4 - 11	400 (295)
1-1/2 - 11	450 (330)

*** IMPORTANT: Lubricate threads before assembly**

Table 21 – HGT-FT Metric Plugs

Metric Plugs	
Thread Size	Torque * (+10% - 0)
Metric	Nm (ft-lb)
M42	400 (295)
M48	500 (370)
M52	600 (440)
M60	800 (590)
M64	850 (630)
M68	1000 (740)
M70	1100 (810)
M75	1300 (960)
M80	1550 (1150)
M85	1800 (1330)
M90	2000 (1480)

*** IMPORTANT: Lubricate threads before assembly**

© 2021 Husky Injection Molding Systems Ltd.

NO INTELLECTUAL PROPERTY RIGHTS ARE GRANTED INCLUDING ANY LICENSE, IMPLIED OR OTHERWISE. ALL RIGHTS RESERVED.

Printed copies are uncontrolled.

15 HGT-EL STANDARD (ELECTRICAL APPLICATIONS)

The following torque values should be used in the case of electrical applications. Notes: For non-standard components, use the recommended manufacturer's specifications. For DLO (Diesel Locomotive Cable) related connections, please call Husky Service or refer to DLO Details (English) 2015 or DLO Details (Chinese) 2015 specifications.

Table 22 – HGT-EL Metric and Imperial Screws, Mounting Hardware (Electrical Applications)

Metric and Imperial Screws				
Size		Torque Nm (in-lb) (+10% - 0)		
		Steel	Al & Cu	Brass
M3	**#4**	0.7 (6.2)	0.3 (2.6)	0.6 (5.3)
M3.5	**#6**	1 (8.8)	0.5 (4.4)	0.8 (7.1)
M4	**#8**	1.3 (11.5)	0.7 (6.2)	1.2 (10.6)
M5	**#10**	1.9 (16.8)	1 (8.8)	1.7 (15.0)
M6	**1/4**	6 (53.1)	3 (26.5)	5 (44.2)
M8	**5/16**	8 (70.8)	4 (35.4)	5 (44.2)
M10	**3/8**	10 (88.5)	5 (44.2)	8 (70.8)

Table 23 – HGT-EL Heater Bands (Electrical Applications)

Heater Band Fasteners				
Fastener Size (Inch)	Fastener Type			
	Nickel Plated Dry	**Nickel Plated Anti-Seize**	**Black Oxide Dry**	**Black Oxide Anti-Seize**
UNC # 6 - 32	30 lb-in / 3.4 N-m	20 lb-in / 2.3 N-m	20 lb-in / 2.3 N-m	15 lb-in / 1.7 N-m
UNC # 8 - 32	40 lb-in / 4.5 N-m	30 lb-in / 3.4 N-m	25 lb-in / 2.8 N-m	20 lb-in / 2.3 N-m
UNC # 10 - 24	55 lb-in / 6.2 N-m	35 lb-in / 4.0 N-m	35 lb-in / 4.0 N-m	30 lb-in / 3.4 N-m
UNC # 1/4 - 20	80 lb-in / 9.0 N-m	55 lb-in / 6.2 N-m	50 lb-in / 5.6 N-m	45 lb-in / 5.1 N-m
UNC # 1/4 - 20 Barrel Bar Clamp* and Spider Straps	80 lb-in / 9.0 N-m	80 lb-in / 9.0 N-m	80 lb-in / 9.0 N-m	80 lb-in / 9.0 N-m
UNC # 5/16 - 18	80 lb-in / 9.0 N-m	80 lb-in / 9.0 N-m	80 lb-in / 9.0 N-m	80 lb-in / 9.0 N-m

Heater Band Ground Stud Nut **	18 lb-in / 2.0 N-m maximum
Post Terminal Nut **	24 lb-in / 2.7 N-m maximum

* For screws attached to each other through a 'common' barrel bar clamp
** Use an open ended wrench to hold the nut closest to the heater as the wiring nut is torqued (threaded ground stud must not rotate).

© 2021 Husky Injection Molding Systems Ltd.

NO INTELLECTUAL PROPERTY RIGHTS ARE GRANTED INCLUDING ANY LICENSE, IMPLIED OR OTHERWISE. ALL RIGHTS RESERVED.

Printed copies are uncontrolled.

Table 24 – HGT-EL Solid State Relays (Electrical Applications)

Solid state relays (e.g. HPN 231452, Crydom model# H12D4840DE 40A Dual SSR)	15 to 20 lb-in / 1.7 to 2.2 N-m

Table 25 – HGT-EL Premolded Cables (Electrical Applications)

Premolded Cable Size	Torque
M8	3.5 lb-in / 0.4 N-m
M12	5.5 lb-in / 0.6 N-m

Table 26 – HGT-EL Electrical Cabinet Door Ground Stud (Electrical Applications)

M6	35 lb-in / 4.0 N-m

16 DRAWING SPECIFICATIONS

- All fasteners and fittings requiring a torque value that deviates from the HGT standards or special torque specifications displayed in section 17 must be individually specified on the drawing next to the item reference (balloon or arrow on the assembly drawing as shown in Figure 3).
- A note referring to the torque standard (HS 252) will be inscribed in the title block of the assembly drawing (see in Figure 4).

Figure 3 – Individual Torque Specifications

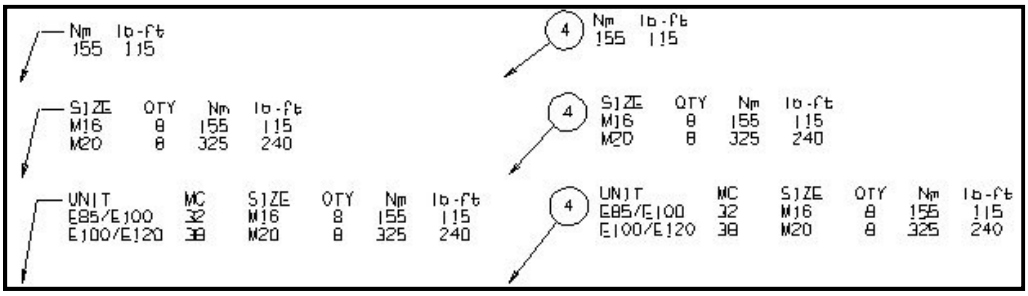

© 2021 Husky Injection Molding Systems Ltd.

NO INTELLECTUAL PROPERTY RIGHTS ARE GRANTED INCLUDING ANY LICENSE, IMPLIED OR OTHERWISE. ALL RIGHTS RESERVED.

Printed copies are uncontrolled.

Figure 4 – Husky General Torque Chart

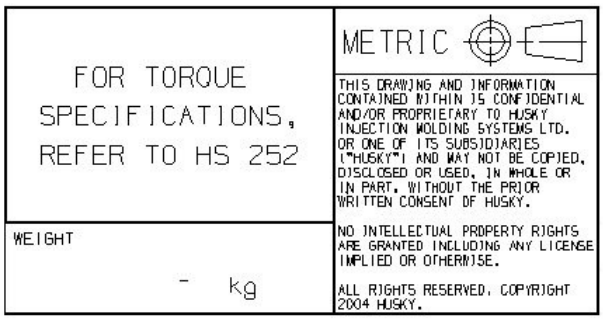

© 2021 Husky Injection Molding Systems Ltd.

NO INTELLECTUAL PROPERTY RIGHTS ARE GRANTED INCLUDING ANY LICENSE, IMPLIED OR OTHERWISE. ALL RIGHTS RESERVED.

Printed copies are uncontrolled.

17 Supplier Recommended Torque Specifications

The following torque values are recommended by suppliers and must be followed unless otherwise specified on the drawing.

17.1 Hydraulic Manifolds – Torque Values for Screws

Table 27 – Torque for Hydraulic Valves Mounting Bolts

Torque N-m (ft-lb) Min.-Max.										
Bolt Size	**Bosh**			**Rexroth**			**Moog/Hydrolux**			**Hyd. Option Segment Manifold**
	Prop. Valves	**Direct Valves**	**Cartridges**	**Prop. Valves**	**Direct Valves**	**Cartridges**	**Prop. Valves**	**Direct Valves**	**Cartridges**	
M5	6-8 (4.4-5.9)	6-8 (4.4-5.9)		6.2-8.9 (4.6-6.6)	6.2-8.9 (4.6-6.6)		5.8-7.8 (4.2-5.7)	7.2-8 (5.3-5.9)		8.9-9.8 (6.6-7.2)
M6	11-14 (8.1-10.3)	11-14 (8.1-10.3)		11-15.5 (8.1-11.4)	11-15.5 (8.1-11.4)		9.4-12.6 (6.9-9.3)	11.7-13 (8.6-9.6)		15.5-17 (11.5-12.6)
M8			26-31 (19-23)			23-32 (17-23)			27-30 (20-22)	32-35 (23-26)
M10	40-50 (30-37)	50-60 (37-44)		53-75 (39-55)	53-75 (39-55)		46-62 (34-45)	50-55 (37-40)		75-83 (55-61)
M12	90-120 (66-88)	85-100 (63-73)	90-105 (66-77)	91-130 (67-96)	91-130 (67-96)	77-110 (57-81)	80-108 (59-80)	90-100 (66-74)	90-100 (66-74)	110-121 (81-89)
M16			240-260 (178-192)			189-270 (139-199)			270-300 (199-221)	270-297 (200-219)
M20	450-560 (332-410)		450-500 (332-369)	301-430 (222-317)	301-430 (222-317)	364-520 (268-383)	391-529 (288-390)	495-550 (365-406)	495-550 (365-405)	520-572 (385-422)
M24						630-900 (464-664)			810-900 (598-664)	900-990 (665-730)
M30						1260-1800 (929-1327)			1620-1800 (1195-1328)	1800-1980 (1330-1460)
Lubricant	Hydraulic Oil									Grease

Note: Those values are mandatory, regardless of screw quality used.

17.2 Hydraulic Manifolds – Torque Values for Orifices

Table 28 – Torque for Orifices on Hydraulic Manifolds

Hydraulic Manifolds – Orifices		
Bolt Size	Torque (+/- 4%)	
	N-m	ft-lb
M5	4	3
M6	6	4.5
M8	13.5	10
M10	27	20
Lubricant	Grease	

© 2021 Husky Injection Molding Systems Ltd.

NO INTELLECTUAL PROPERTY RIGHTS ARE GRANTED INCLUDING ANY LICENSE, IMPLIED OR OTHERWISE. ALL RIGHTS RESERVED.

Printed copies are uncontrolled.

17.3 Hose/Pipe Clamps – Torque Values for Screws

Table 29 – Torque for Stauff or Hydac Hose/Pipe Clamps Mounting Bolts

Clamp Type	Lubricant	Bolt Size	Clamp Size	Torque in Nm (ft-lb) (+/- 4%) with Clamping Material		
				Aluminum (AL)	Polypropylene (PP)	Polyamid (PA)
Single clamp Light series	Loctite	M6	0 to 6	12 (9)	8 (5.9)	10 (7.4)
Single clamp Heavy series		M10	1	30 (22)	12 (9)	20 (15)
			2	30 (22)	12 (9)	20 (15)
			3	35 (26)	15 (11)	25 (18)
		M12	4	55 (40)	30 (22)	40 (30)
		M16	5	120 (90)	45 (33)	55 (40)
		M20	6	220 (160)	80 (60)	150 (110)
		M24	7	250 (180)	110 (80)	250 (180)
Twin clamp		M6	1	N/A	5 (3.7)	6 (4.4)
		M8	2	N/A	12 (8.9)	12 (8.9)
			3	N/A		
			4	N/A		
			5	N/A	8 (5.9)	8 (5.9)

Table 30 – Torque for Stopflex Hose Bands Mounting Bolts

Stopflex Hose Bands

Hose Band	Hose Outside Diameter (mm)		Bolt Size (metric)	Bolt Tightening Torque
Model Number	Ø MIN	Ø MAX	Ø M	Nm (ft-lb) (+/- 4%)
STOPFA13135	13	13.5	M6	3 (2)
STOPFA1415	14	15	M6	3 (2)
STOPFA1718	17	18	M6	3 (2)
STOPFA1819	18	19	M6	3 (2)
STOPFA2122	21	22	M6	3 (2)
STOPFA3031	30	31	M6	7 (5)
STOPFA3233	32	33	M6	7 (5)
STOPFA3839	38	39	M6	7 (5)
STOPFA3940	39	40	M6	7 (5)
STOPFA4547	45	47	M8	10 (7)
STOPFA5354	53	54	M8	10 (7)
STOPFA5456	54	56	M8	10 (7)
STOPFA5759	57	59	M8	10 (7)
STOPFA6668	66	68	M8	10 (7)
STOPFA7274	72	74	M8	10 (7)

© 2021 Husky Injection Molding Systems Ltd.

NO INTELLECTUAL PROPERTY RIGHTS ARE GRANTED INCLUDING ANY LICENSE, IMPLIED OR OTHERWISE. ALL RIGHTS RESERVED.

Printed copies are uncontrolled.

Table 31 – Heavy-Duty Hose Clamp (T-Bolt Style)

King Seal Fastener Technology Part # KTB412 (97-105mm) HPN 6763438	60-90 in-lb (6.8-10 N-m)	

17.4 Hydraulic Motors – Torque for Mounting Bolts

Table 32 – Torques for Hydraulic Motors Mounting Bolts

Torque N-m (ft-lb) +/-tolerance value	
Bolt Size	**Hagglungs Hydraulic Motors**
M16	280 +/-15 (205 +/-11)
M20	540 +/-20 (400 +/-15)
M24	900 +/- 30 (665 +/-22)
Lubricant	Hydraulic Oil

17.5 Bosch Rexroth DBDS Pressure Relief Valves

Table 33 – Bosh Rexroth DBDS Pressure Relief Valves

Size	**Maximum Tightening Torque * (+/- 5%)**	
NG	**N-m**	**ft-lb**
6	80	59
10	150	110
20	300	221
30	500	369

* The tightening torques are recommended values assuming a friction coefficient of 0.12 and the use of a torque wrench.

© 2021 Husky Injection Molding Systems Ltd.

NO INTELLECTUAL PROPERTY RIGHTS ARE GRANTED INCLUDING ANY LICENSE, IMPLIED OR OTHERWISE. ALL RIGHTS RESERVED.

Printed copies are uncontrolled.

17.6 Bladder Accumulator Neck Adaptor Specifications

Table 34 – Bladder Accumulator Neck Adaptor Specifications

Accumulator Size**	Accumulator Port Size	Torque [N-m]	Torque [ft-lb]
10L	BSPP 2” (G 2”)	339 N-m	250 ft-lb
20L	BSPP 2” (G 2”)	339 N-m	250 ft-lb
32L	BSPP 2” (G 2”)	339 N-m	250 ft-lb
50L/54L	BSPP 2” (G 2”)	339 N-m	250 ft-lb
50L High Flow	BSPP 2 ½” (G 2 ½”)	420 N-m	310 ft-lb

17.7 Hydac Oil Level Sight Gauge

HPN 2841146 (Hydac Model # 3070285 FSK127-2.5/0/-/12)	M12 banjo bolts	8 ft-lb (+1, 0) 10 N-m (+2, 0)

17.8 Hydac Pressure Transducers

HPN 7980938 (Hydac Model # 926910 Pressure transmitter HDA 4776-A-300-453)	20 N-m (+10%, -0)	15 ft-lb (+10%, -0)
HPN 9247632 (Hydac Model # 927321 Pressure transmitter HPT 1776-A-0300-453)	20 N-m (+10%, -0)	15 ft-lb (+10%, -0)

17.9 Danfoss Pressure Transducer

HPN 6830141 Danfoss Part # 063G2021, MBS 1250, 300 bar	M12x1	33 ft-lb (45 N-m) (+10%, -0)

© 2021 Husky Injection Molding Systems Ltd.

NO INTELLECTUAL PROPERTY RIGHTS ARE GRANTED INCLUDING ANY LICENSE, IMPLIED OR OTHERWISE. ALL RIGHTS RESERVED.

Printed copies are uncontrolled.

17.10 NUMATICS AIR VALVE ASSEMBLY TORQUE SPECIFICATIONS

The following torque specifications are recommended by the supplier and should be used unless otherwise specified. These specifications apply to Numatics 2012, 2035, ISO 1, ISO 2 & ISO 3 air valve assemblies.

17.10.1 TORQUE SPECIFICATIONS FOR NUMATICS 2012 & 2035 AIR VALVE ASSEMBLIES

Figure 5 – Numatics 2012 & 2035 Air Valve Assemblies

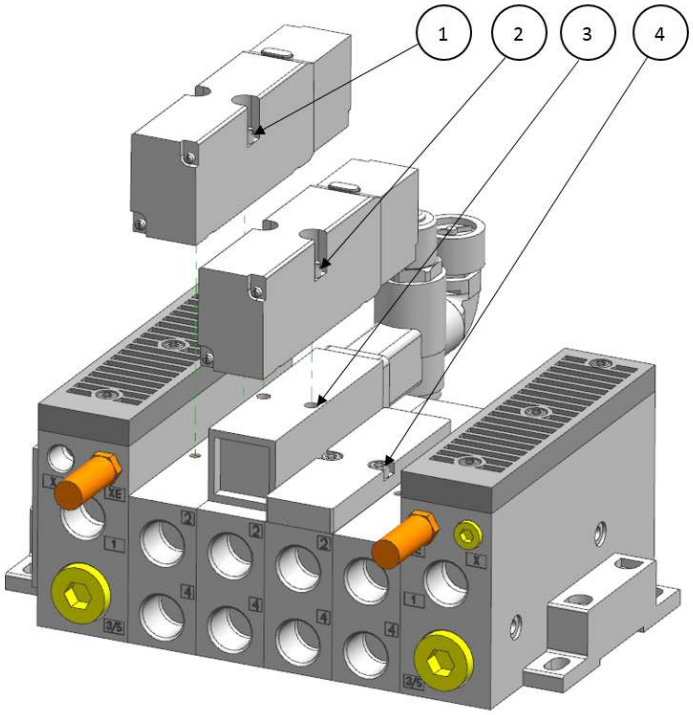

Table 35 – Numatics 2012 & 2035 Air Valve Assemblies

Fastener	Description	2012 Air Valve Assy		2035 Air Valve Assy	
		Torque		Torque	
		N-m	in-lb	N-m	in-lb
1	Valve to Manifold	0.9-1.1	8-10	2.5-2.8	22-25
2	Valve to Sandwich Plate	0.9-1.1	8-10	2.8-3.4	25-30
3	Sandwich Plate to Manifold	0.9-1.1	8-10	2.8-3.4	25-30
4	Blanking Plate to Manifold	1.4-1.7	12-15	2.8-3.4	25-30

© 2021 Husky Injection Molding Systems Ltd.

NO INTELLECTUAL PROPERTY RIGHTS ARE GRANTED INCLUDING ANY LICENSE, IMPLIED OR OTHERWISE. ALL RIGHTS RESERVED.

Printed copies are uncontrolled.

17.10.2 TORQUE SPECIFICATIONS FOR NUMATICS ISO 1, 2 & 3 AIR VALVE ASSEMBLIES

Figure 6 – Numatics ISO 1, 2 & 3 Air Valve Assemblies

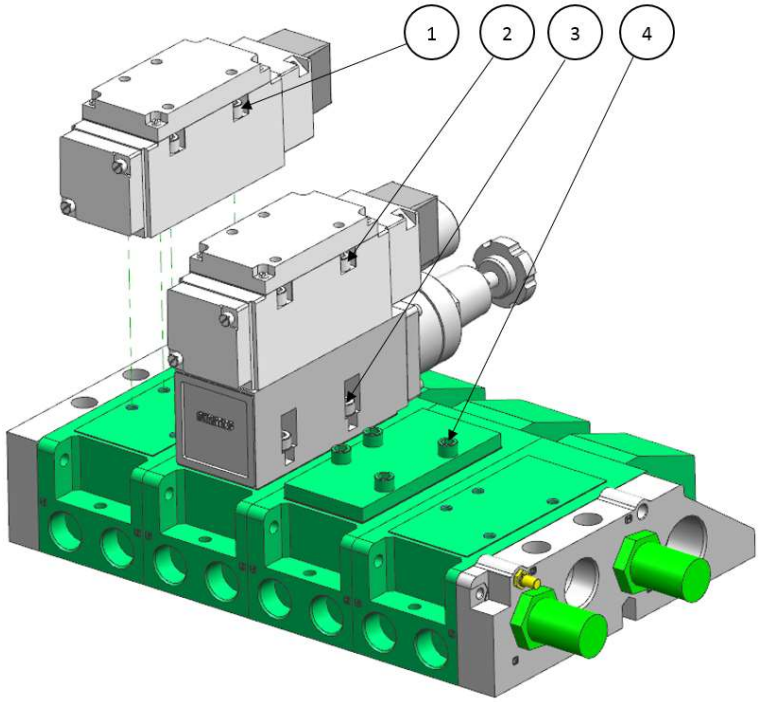

Table 36 - Numatics ISO 1, 2 & 3 Air Valve Assemblies

Fastener	Description	ISO 1, 2 & 3 Air Valve Assemblies	
		Torque	
		N-mm	in-lb
1	Valve to Manifold	3.6-4.3	32-38
2	Valve to Sandwich Plate	3.6-4.3	32-38
3	Sandwich Plate to Manifold	3.6-4.3	32-38
4	Blanking Plate to Manifold	3.6-4.3	32-38

© 2021 Husky Injection Molding Systems Ltd.

NO INTELLECTUAL PROPERTY RIGHTS ARE GRANTED INCLUDING ANY LICENSE, IMPLIED OR OTHERWISE. ALL RIGHTS RESERVED.

Printed copies are uncontrolled.

17.11 HYDAC MALE PRESSURE TEST POINT

HPN 2638323 Hydac designation: 6003737 (9/16-18 UNF, 630 bar, 1620 series, O-ring/Form E)	Thread 9/16-18 UNF	25 ft-lb (35 N-m) (+10%, -0)

© 2021 Husky Injection Molding Systems Ltd.

NO INTELLECTUAL PROPERTY RIGHTS ARE GRANTED INCLUDING ANY LICENSE, IMPLIED OR OTHERWISE. ALL RIGHTS RESERVED.

Printed copies are uncontrolled.

18 INTERNATIONAL STANDARDS TORQUE SPECIFICATIONS

The following torque values obtained from international standards are specified on the drawing when deviating from the Husky general torque standard.

18.1 ISO 6162:1994 - SPLIT FLANGE ASSEMBLIES

Table 37 - Code 61 Split Flange Assemblies

4 Bolt Split Flange Assemblies Code 61 (25 bar to 350 bar series)		
Bolt Size	Torque (+25% - 0) See Section 18.3	
	N-m	ft-lb
M8	25	18
M10	53	40
M12	95	70
M16	220	160
Lubricant	Lubriplate FGL-1 or Molykote G – rapid plus with MoS2	

Table 38 - Code 62 Split Flange Assemblies

4 Bolt Split Flange Assemblies Code 62 (400 bar series)		
Bolt Size	Torque (+25% - 0) See Section 18.3	
	N-m	ft-lb
M8	25	18
M10	53	40
M12	95	70
M14	150	110
M16	220	160
M20	390	290
Lubricant	Lubriplate FGL-1 or Molykote G – rapid plus with MoS2	

18.2 CAUTION

It is important that all screws be lightly torqued (e.g. from 1 to 2 FFFT) before applying the final recommended torque values to avoid breaking the flange halves during installation.

18.3 NOTES

- The recommended torque values are consistent with the HGT-50 general standard. Exception: M14 bolts (special size requiring a note on the drawing).
- The recommended torque values may be increased by 25% when flange head screws of property 12.9 screws are used with Unbrako Durlok-12.9 screws.

19 PET MOLD AND HOT RUNNER SPECIAL TORQUE SPECIFICATIONS

Following torque specifications must be applied accordingly to ensure proper installation.

© 2021 Husky Injection Molding Systems Ltd.

NO INTELLECTUAL PROPERTY RIGHTS ARE GRANTED INCLUDING ANY LICENSE, IMPLIED OR OTHERWISE. ALL RIGHTS RESERVED.

Printed copies are uncontrolled.

19.1 CAM FOLLOWER TORQUE SPECIFICATIONS

Table 39 – CAM Follower Torque Specifications

CAM follower HPN	Component	Torque [N-m]	Torque [ft-lb]
1425388	Nut	22 N-m	16 ft-lb
1502548	Nut	87 N-m	64 ft-lb
2739013	Cam Follower	87 N-m	64 ft-lb
	Set Screw	8.5-9 N-m	6.3-6.6 ft-lb
5792862	Cam Follower	87 N-m	64 ft-lb
	Set Screw	8.5-9 N-m	6.3-6.6 ft-lb

19.2 EOAT TUBE RETAINER PIN TORQUE SPECIFICATION

Figure 7 – EOAT Tube Retainer Pin Torque Specification

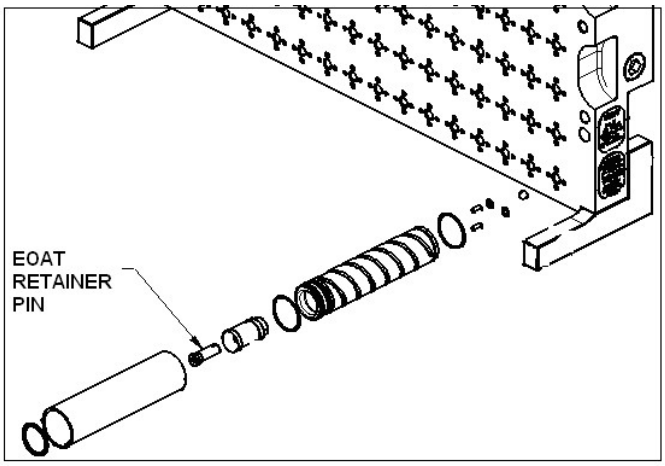

*Apply 20N-m torque to EOAT tube retainer pin shown in Figure 5 left.

19.3 COOLPIK VACUUM/BLOW PIN TORQUE SPECIFICATIONS

Table 40 – COOLPIK Vacuum/Blow Pin Torque Specifications

Vacuum/Blow Pin Size	Torque	
	N-m	ft-lb
M6	2	1.4
M12	15	11
M16	34	25

© 2021 Husky Injection Molding Systems Ltd.

NO INTELLECTUAL PROPERTY RIGHTS ARE GRANTED INCLUDING ANY LICENSE, IMPLIED OR OTHERWISE. ALL RIGHTS RESERVED.

Printed copies are uncontrolled.

19.4 COOLPIK MOVING PUCK INSTALLATION TORQUE SPECIFICATION

Apply following torque during moving puck installation.

Figure 8 – Moving Puck Assembly Installation Torque Specification

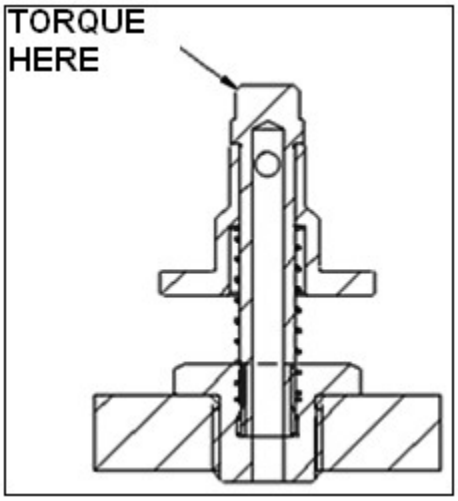

Torque the sub-assembly into the COOLPIK plate to 18 N-m through the top of the pin using an 8mm socket.

19.5 COOLPIK PLATE MOUNTING TORQUE SPECIFICATION

Apply HGT-80 [77N-m (56.8 lb-ft)] torque for M10 COOLPIK plate mounting screws.

Figure 9 – COOLPIK Assembly on machine Plenum

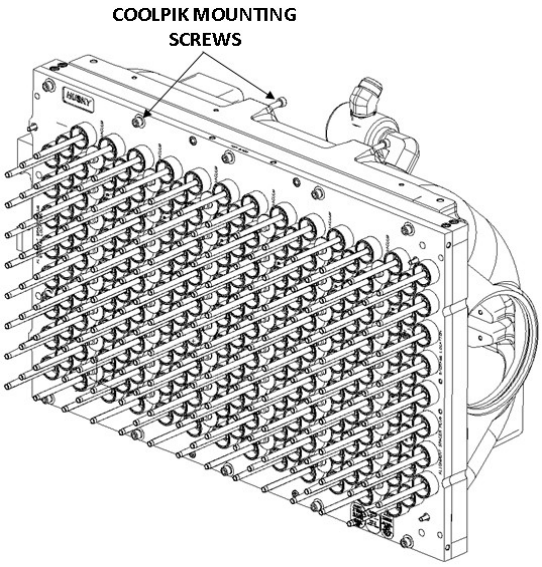

© 2021 Husky Injection Molding Systems Ltd.

NO INTELLECTUAL PROPERTY RIGHTS ARE GRANTED INCLUDING ANY LICENSE, IMPLIED OR OTHERWISE. ALL RIGHTS RESERVED.

Printed copies are uncontrolled.

19.6 Mold/Hot Runner Lift Bars Mounting Screws Torque Applications

Table 41 – Mold/Hot Runner Lift Bars Mounting Screws Torque Specifications

Application		Hardware		Base/Threaded Material	Torque Standard
Mechanical	**• Hot Runner/Mold Lift Bars Mounting Screws (Excluding M30 and Larger**	Screws and Threaded Rods	- DIN 912-12.9 SHCS - DURLOK-12.9-UNB HHS - DIN 933 & 931-10.9 HHCS - DIN 976-12.9&10.9 ROD - ASTM A574 SHCS	Steel Cast Iron	HGT-50
	• Hot Runner/Mold Lift Bars Mounting Screws, M30 and Larger Sizes	Screws and Threaded Rods	- DIN 912-12.9 SHCS - DURLOK-12.9-UNB HHS - DIN 933 & 931-10.9 HHCS - DIN 976-12.9&10.9 ROD - DIN 7991-10.9 FHCS - ISO 7380-10.9 BHCS - ASTM A574 SHCS	Any Material for Lift Bar Mounting Screws	HGT-35

19.7 Gib/Wear Plate Mounting Screws Torque Specification

Apply HGT-50 on Gibs and Wear Plates

Apply HGT-LHCS for Wear Plates using LHCS

19.8 Neck ring plugs Torque Specification

Apply appropriate torque to the Neck Ring plugs according to the table below.

Table 42 – Neck Ring Plugs Torque Specifications

HPN	Size	Material	Maximum Tightening Torque (+ 10% / - 10%)	
			N-m	ft-lb
4125714	M5	Brass	1.5	1.1
6359476	1/16	Brass	7	5.2

19.9 Stack Inserts Torque Specification

Apply HGT-80 on all SHCS's that are used on Stack Inserts

© 2021 Husky Injection Molding Systems Ltd.

NO INTELLECTUAL PROPERTY RIGHTS ARE GRANTED INCLUDING ANY LICENSE, IMPLIED OR OTHERWISE. ALL RIGHTS RESERVED.

Printed copies are uncontrolled.

19.10 TORQUE SPECIFICATION FOR WATER MANIFOLDS TO SLIDES

Apply HGT-80 on all SHCS's that are used to mount Slide Water Manifolds to Slides

19.11 TORQUE SPECIFICATION FOR SLIDE TO CONNECTING BARS

Apply HGT-80 on all SHCS's that are used to mount Slides to Connecting Bars

19.12 TORQUE SPECIFICATION FOR EOAT ASSY. TO ROBOT

Apply HGT-80 on all SHCS's that are used to mount EOAT Assembly to Robot Carriage

© 2021 Husky Injection Molding Systems Ltd.

NO INTELLECTUAL PROPERTY RIGHTS ARE GRANTED INCLUDING ANY LICENSE, IMPLIED OR OTHERWISE. ALL RIGHTS RESERVED.

Printed copies are uncontrolled.

HS 897 - ADHESIVE STANDARD

TABLE OF CONTENTS

1 PURPOSE 2
2 DOCUMENT CONTROL 2
3 REFERENCES 2
4 ADHESIVES 2
4.1 USAGE 2
4.2 SELECTION 3
5 ADDITIONAL LINKS 5

TABLE OF TABLES

Table 1 - Adhesive Selection for Specific Applications 3
Table 2 - Adhesive Selection for General Applications 3
Table 3 - Adhesive List 4

REVISION LOG

Document Last Saved	8/24/2021 8:41:00 AM	By User	Duckett, Ian (Milton)
Release Date	2021-08-19	Approved By	(see reviewers below)

Rev	Remarks	Edited	Reviewed
0	Original Issue	Ian Duckett / 2021-08-19	HRC Standards / Fred Mazzia
1	Added Loctite 668 per SR 60966	Ian Duckett / 2021-08-23	HRC Standards / Z.Sever

© 2021 Husky Injection Molding Systems Ltd.

NO INTELLECTUAL PROPERTY RIGHTS ARE GRANTED INCLUDING ANY LICENSE, IMPLIED OR OTHERWISE. ALL RIGHTS RESERVED.

Printed copies are uncontrolled.

1 PURPOSE

This standard contains a list of approved adhesives, thread lockers & retaining compounds for use in Husky systems. Specific product selection is the responsibility of the equipment operator/owner and may depend on climate, application, performance and regional/regulatory requirements.

2 DOCUMENT CONTROL

Revisions to this document shall be authorized by Corporate Operations.

3 REFERENCES

HS 252 – Standard Assembly Torques

HS 609 – Lubricants and Coolants

4 ADHESIVES

4.1 USAGE

- Clean threads of machine oils and lubricant to maximize bonding of adhesive.
- For thru holes, apply the adhesive onto the bolt at the thread engagement area.
- For blind holes, apply the adhesive to the fastener and the internal threads down to the bottom of the hole. If the adhesive is only applied to the fastener, air pressure will force the liquid thread locker to escape as you torque down.
- For disassembly: Remove with standard hand tools or in rare instances where hand tools do not work because of excessive engagement length, apply localized heat to nut or bolt to approximately 250°C. Disassemble while hot.

© 2021 Husky Injection Molding Systems Ltd.

NO INTELLECTUAL PROPERTY RIGHTS ARE GRANTED INCLUDING ANY LICENSE, IMPLIED OR OTHERWISE. ALL RIGHTS RESERVED.

Printed copies are uncontrolled.

4.2 SELECTION

Table 1 - Adhesive Selection for Specific Applications

Application			Food Grade	Non-Food Grade
Cam followers, set screw threads, screws that secure the hot runner manifold (Not required when Nylock coated bolts are used)			Not Available	Loctite 248 Loctite 242
Screws installed into the hot runner manifold (heads & threads for: Sprue Bushing screws, Sprue Bar screws, Transfer Bushing screws, Backup Insulator screws, T/C mounting screws)			See HS 609 – Lubricants and Coolants	
FITTING LUBRICATION	STEEL	NPT	Loctite 567	Loctite 577
AIR	STEEL, ALU and BRASS	NPT		
WATER	STEEL and BRASS	NPT		
	ALUMINUM	NPT		
	STAINLESS STEEL	NPT		
ULTRASYNC & ULTRASHOT GUIDE ELEMENTS	STEEL	TRANSITIONAL FIT	Not Available	Loctite 603 (USync E & Ultrashot))
				Loctite 668 (USync P & H)

Table 2 - Adhesive Selection for General Applications

Application		Connection				Product Name	Other Notes
MECHANICAL	ACTIVE METALS	Fasteners M5 and smaller	Removable with hand tools	Low Strength	-55 to 150 Degrees C	Loctite 222 (purple)	
		Fasteners M6 to M20	Removable with hand tools	Medium Strength	-54 to 149 Degrees C	Loctite 242 (blue)	
		Fasteners M6 to M20	Removable with hand tools	Medium Strength	-54 to 149 Degrees C	Loctite 243 (blue)	Faster cure time and better oil resistance than with Loctite 242
		Fasteners M10 to M25 (or greater)	Removable with heat and hand tools	High Strength	-54 to 150 Degrees C	Loctite 271 (red)	
	INACTIVE METALS*	Fasteners M6 to M20	Removable with heat and hand tools	Medium Strength	-54 to 149 Degrees C	Loctite 2440**	
		Fasteners M10 to M25 (or greater)	Removable with heat and hand tools	High Strength	-54 to 149 Degrees C	Loctite 2760**	

* Inactive metals include stainless steel, zinc, magnesium, black oxide, cadmium, anodized aluminum, passivated titanium, etc.

** 2440 and 2760 are primerless thread locking adhesives designed for use with most inactive metals except anodized aluminum.

Note – The use of Loctite 222, 242, 243 and 271 without the use of a primer on inactive metal threads results in lower bond strengths as well as significantly increased cure times.

© 2021 Husky Injection Molding Systems Ltd.

NO INTELLECTUAL PROPERTY RIGHTS ARE GRANTED INCLUDING ANY LICENSE, IMPLIED OR OTHERWISE. ALL RIGHTS RESERVED.

Printed copies are uncontrolled.

Table 3 - Adhesive List

Product (CTRL+Click to open Material Data Sheet)	**Manufacturer** (CTRL + Click to open web site)	**Name**	**Product Use**
	LOCTITE	Loctite 567	General purpose instant sealer for tapered and straight/tapered fittings Food grade
	LOCTITE	Loctite 577	Designed for the locking and sealing of metal threaded pipes and fittings. Particularly suitable for use on stainless steel without the need for surface activation Non-food grade
	LOCTITE	Loctite 222	Low Strength Viscosity Low, thixotropic General purpose thread locker Breakaway torque 6Nm (M10) Color: Purple Liquid form
	LOCTITE	Loctite 242	Medium strength Medium viscosity General purpose thread locker Breakaway torque 12Nm (M10) Color: Blue Liquid form
	LOCTITE	Loctite 243	Medium strength Medium viscosity General purpose thread locker Breakaway torque 20Nm (M10) Color: Blue Liquid form
	LOCTITE	Loctite 271	High strength Low viscosity General purpose thread locker Breakaway torque 28.5Nm (M10) Color: Red Liquid form

© 2021 Husky Injection Molding Systems Ltd.

NO INTELLECTUAL PROPERTY RIGHTS ARE GRANTED INCLUDING ANY LICENSE, IMPLIED OR OTHERWISE. ALL RIGHTS RESERVED.

Printed copies are uncontrolled.

	LOCTITE	Loctite 2440 *DISCONTINUED* ➔ Replace w/ Loctite 243	Medium strength Medium viscosity General purpose thread locker Breakaway torque 24Nm (M10) Color: Blue Liquid form Primerless
	LOCTITE	Loctite 2760	High strength Medium viscosity General purpose thread locker Breakaway torque 37Nm (M10) Color: Red Liquid form Primerless
	LOCTITE	Loctite 248	Medium strength Medium viscosity General purpose thread locker Breakaway torque 12Nm (M10) Color: Blue Convenient stick format prevents dripping
	LOCTITE	Loctite 603	Retaining Compound High strength. Ideal for bearings. For use on close-fitting cylindrical parts. High oil tolerance
	LOCTITE	Loctite 668	Retaining Compound Medium to High strength. For use on close-fitting cylindrical parts. Very high oil tolerance Wax/solid form stick to prevent dripping

5 Additional Links

Loctite Safety Data Sheets

© 2021 Husky Injection Molding Systems Ltd.

NO INTELLECTUAL PROPERTY RIGHTS ARE GRANTED INCLUDING ANY LICENSE, IMPLIED OR OTHERWISE. ALL RIGHTS RESERVED.

Printed copies are uncontrolled.

MTW (Machine Tool Wire) HPN OVERVIEW

Required Ratings -> MTW (UL) TEW (CSA) 600V 105°C - flexible stranding

Color	Code	20AWG	18AWG	16AWG	14AWG	12AWG	10AWG	8AWG	6AWG	4AWG	2AWG
Black	BK		739786	72063	9332	659869	71088	73261	71086		
Red	RD		633106	9326	7783	659870	72060	73317			
Blue	BU	2766310	633105	9325	70231	659871	72061	73319			
Light Blue	LTBU				2293703	2184015	2184014	2316039	6205418		
Green / Yellow	GNYE	2382529	739787	200418	72311	659874	72312	632386	72313	632387	632388
Orange	OG		2184016	2095049	2295943						
White	WH		633107	12514	71371	2069568	73262	73263			
Grey	GY		6392153								
Grey / White	GYWH		6392154								

Notes:
1) Length feedback is rounded up to the nearest 10cm increment
2) Stopper Code "---" means no stopper required
3) Stopper Code "SC" means solder connection
4) Stopper code "Cxx" means the crimp contact HPN's are in device BOM
5) Stopper Code "HF" is used for attaching 18 AWG wires to high density terminals, this requires operator rework using HEX crimp pliers
6) DLO = Diesel Locomotive Cable
7) DLO wires are made to fit, not all length values will be provided
8) Refer to HS 14 Table 1 FOR UL / EN AMPACITY VALUES
9) Ferrules use DIN Color Code

Ferrules

Code	AWG	Type	HPN
F	24	Yellow	2218633
F	22	Turquoise	2219176
F	20	White	648307
F (HF)	18	Red	2220698
F	16	Black	644619
F	14	Blue	5834805
F	12	Grey	5834806
F	10	Yellow	5834808
F	8	Red	654877
F	6	Blue	2218632

Ferrules (UnInsulated)

Code	AWG	Type	HPN
UF	24	5mm	5836256
UF	22	6mm	5836258
UF	20	6mm	5836260
UFL	20	10mm	5836260
UF	18	8mm	5836263
UFL	18	10mm	6025763
UF	16	10mm	5836264
UF	14	10mm	5836265
UF	12	12mm	5836268
UF	10	12mm	5836269

Ring Terminals

Code	AWG	Color	Size	HPN
R1	22-16	Red	#4	2218770
R2			#6	2218792
R3			#8	2218797
R4			#10	721023
R28			1/2"	2419923
R30			1/4"	2383970
R11	18-14	Blue	#4	2218800
R12			#6	2218808
R13			#8	2218810
R15			#10	2218811
R29			1/4"	2424865
R32			5/16"	3351291
R16			3/8"	2389180
R21	12-10	Yellow	#6	2218813
R22			#8	2218814
R23			#10	2218815
R24			1/4"	2218816
(D)R31			5/16"	2961498
R25			3/8"	2218817
R33		Hi-Temp	#10	4993868

Spade Terminals (Female)

Code	AWG	Color	Size	HPN
S0	22-18	Red	.110"	9805050
S1			.187"	2219019
S2			.250"	2505965
S6	16-14	Blue	.110"	2374139
(D)S3			.187"	3109466
(D)S7			.250"	2273871
S8			.250" 90°	9786509
S11	12-10	Yellow	.250"	2219024
S12			.250" 90°	720817

PFC (Plastic Flexible Conduit)

HPN	Description
654724	O.D. = 28.5mm (I.D. = 23mm)
654725	O.D. = 34.5mm (I.D. = 29mm)
654726	O.D. = 42.5mm (I.D. = 36mm)
654727	O.D. = 54.5mm (I.D. = 48mm)

Ferrules (Double wire)

Code	AWG	Type	HPN
DF	20	White	6628161
DF	18	Red	2218660
DF	16	Black	2218663
DF	14	Blue	2218664
DF	12	Grey	2218678
DF	10	Yellow	2218649
DF	8	Red	6641497
DF	6	Blue	6641499

WIRE GAGE	
AWG	mm²
26	0.14
24	0.25
22	0.34
20	0.5
19	0.75
18	1.0
16	1.5
14	2.5
12	4
10	6
8	10
6	16
4	25
2	35
1	50

STUD SIZE	
USA	METRIC
#2	M2
#4	M2.5
#5	M3
#6	M3.5
#8	M4
#10	M5
1/4"	M6
5/16"	M8
3/8"	M10
7/16"	M11
1/2"	M12
5/8"	M16

Fork Terminals

Code	AWG	Color	Size	HPN
U19	22-16	Red	#6	2218818
U18	18-14	Blue	#6	2218820
U1			#8	2218821
U2			#10	2218823
U16	12-10	Yellow	#8	2218827
U17			#10	2218828

PFC Fittings

HPN	Description
243336	M25, Straight, O.D. = 28.5mm
243337	M32, Straight, O.D. = 34.5mm
243338	M40, Straight, O.D. = 42.5mm
243339	M50, Straight, O.D. = 54.5mm
3301134	M63, Straight, O.D. = 54.5mm
243342	M25, 90°, O.D. = 28.5mm
243345	M32, 90°, O.D. = 34.5mm
243348	M40, 90°, O.D. = 42.5mm
243350	M50, 90°, O.D. = 54.5mm
243351	M63, 90°, O.D. = 54.5mm

DLO CABLES

Gage	HPN	O.D. (mm)
8 AWG	73261 * MTW not DLO *	N/A
6 AWG	71086 * MTW not DLO *	N/A
4 AWG	2564585	Insulated Conductor 11.7 Bare Conductor 6.7

COMPRESSION LUGS

X-Ref OLD Husky Code	Husky Code	Lug Gage	Hole Size	Angle	HPN	Panduit #	Crimp Tool	Die Code	Crimp Details
L1,R27	D1 *	8 AWG	#10	Straight	5823010	LCAX8-10-L	PANDUIT CT-3001	RED P21	Strip Length = 11 mm Number of Crimps = 1
	D2			45°	5823013	LCAX8-10H-L			
	D3			90°	5823016	LCAX8-10F-L			
L2	D4 *		1/4"	Straight	5823017	LCAX8-14-L			
	D5			45°	5823020	LCAX8-14H-L			
	D6			90°	5823023	LCAX8-14F-L			
L3	D7 *		5/16"	Straight	5823026	LCAX8-56-L			
	D8			45°	5823030	LCAX8-56H-L			
	D9			90°	5823031	LCAX8-56F-L			
L4	D10 *		3/8"	Straight	5823032	LCAX8-38-L			
	D11			45°	5823034	LCAX8-38H-L			
	D12			90°	5823036	LCAX8-38F-L			
L6	D13 *	6 AWG	#10	Straight	5801026	LCAX6-10-L	PANDUIT CT-3001	BLUE P24	Strip Length = 12 mm Number of Crimps = 1
	D14			45°	5806776	LCAX6-10H-L			
	D15			90°	5801139	LCAX6-10F-L			
L5	D16 *		1/4"	Straight	5801029	LCAX6-14-L			
	D17			45°	5806777	LCAX6-14H-L			
	D18			90°	5801143	LCAX6-14F-L			
L8	D19 *		5/16"	Straight	5801030	LCAX6-56-L			
	D20			45°	5806778	LCAX6-56H-L			
	D21 *			90°	5801145	LCAX6-56F-L			
L9	D22 *		3/8"	Straight	5801031	LCAX6-38-L			
	D23			45°	5806779	LCAX6-38H-L			
	D24 *			90°	5801148	LCAX6-38F-L			
	D25	4 AWG	#10	Straight	5801032	LCAX4-10-L	PANDUIT CT-3001	GRAY P29	Strip Length = 14 mm Number of Crimps = 1
	D26			45°	5806780	LCAX4-10H-L			
	D27			90°	5801154	LCAX4-10F-L			
L12,L20	D28 *		1/4"	Straight	5801033	LCAX4-14-L			
	D29			45°	5806781	LCAX4-14H-L			
L11	D30 *			90°	5801161	LCAX4-14F-L			
L13,L22	D31 *		5/16"	Straight	5801035	LCAX4-56-L			
	D32			45°	5806783	LCAX4-56H-L			
L25	D33 *			90°	5801164	LCAX4-56F-L			
L14,L21	D34 *		3/8"	Straight	5801036	LCAX4-38-L			
	D35			45°	5806786	LCAX4-38H-L			
L24	D36 *			90°	5801167	LCAX4-38F-L			

UNINSULATED FERRULES

X-Ref OLD Husky Code	Husky Code	I.D. (mm)	Length (mm)	HPN	Panduit #	Crimp Tool	Die Code	# of Crimps
NF	UF1 *	4.5	12	5822985	F83-12	GREENLEE K28GL	7 AWG	1
	UF2 *		18	5822989	F83-18			2
	UF3 *		25	5823006	F83-25			2
NF			12			GREENLEE K28GL	5 AWG	
	UF4 *	5.8	18	5800956	F84-18			2
	UF5 *		25	5800957	F84-25			2
	UF6 *		32	5800958	F84-32			3
NF			15			GREENLEE K28GL	3 AWG	
	UF7 *	7.3	18	5800963	F85-18			2
	UF8 *		25	5800964	F85-25			2
	UF9 *		32	5800966	F85-32			3

BOLT HOLE SIZE	
USA	METRIC
#10	M5
1/4"	M6
5/16"	M8
3/8"	M10
1/2"	M12
5/8"	M16

SWI-2540 DLO Compression Lug Crimping Guidelines

SWI-2541 DLO Small Ferrule Crimping Guidelines

SWI-2542 DLO Large Ferrule Crimping Guidelines

SWI-2551 DLO Installation Guidelines

Note:
<=6AWG use MTW
>=4AWG use DLO
DLO minium bend radius 4 x O.D.

* = Bin Stock

HUSKY®

MACHINE MODEL
UNIVERSAL MASTER

	Name	Date	Time
Edited	cfleetwo	12/21/2018	1:21:22 PM
Appr			
Checked			
Original			

DESCRIPTION
DLO DETAILS

PROJECT | =WIRE | +
MACHINE
DRAWING NO. UNIVERSAL MASTER
Sheet 2 | Total 23

DLO CABLES

Gage	HPN	O.D. (mm)
2 AWG	725724	Insulated Conductor 13.0 Bare Conductor 8.0
1 AWG	725725	Insulated Conductor 16.3 Bare Conductor 9.5
1/0	725727	Insulated Conductor 17.8 Bare Conductor 11.0

COMPRESSION LUGS

X-Ref OLD Husky Code	Husky Code	Lug Gage	Hole Size	Angle	HPN	Panduit #	Crimp Tool	Die Code	Crimp Details
	D37 *	2 AWG	#10	Straight	5801037	LCAX2-10-E	PANDUIT CT-3001	BROWN P33	Strip Length = 15 mm Number of Crimps = 1
	D38			45°	5806787	LCAX2-10H-E			
	D39			90°	5801174	LCAX2-10F-E			
L26	D40 *		1/4"	Straight	5801038	LCAX2-14-E			
	D41			45°	5806788	LCAX2-14H-E			
	D42			90°	5801180	LCAX2-14F-E			
L27	D43 *		5/16"	Straight	5801039	LCAX2-56-E			
	D44			45°	5806789	LCAX2-56H-E			
	D45			90°	5801185	LCAX2-56F-E			
L28	D46 *		3/8"	Straight	5801040	LCAX2-38-E			
	D47			45°	5806790	LCAX2-38H-E			
L36	D48 *			90°	5801186	LCAX2-38F-E			
L23,L29	D49 *		1/2"	Straight	5801041	LCAX2-12-E			
	D50			45°	5806791	LCAX2-12H-E			
	D51			90°	5801187	LCAX2-12F-E			
	D52	1 AWG	#10	Straight	5801050	LCAX1-10-X	PANDUIT CT-3001	GREEN P37	Strip Length = 17 mm Number of Crimps = 1
	D53			45°	5806792	LCAX1-10H-X			
	D54			90°	5806560	LCAX1-10F-X			
L30	D55 *		1/4"	Straight	5801051	LCAX1-14-X			
	D56			45°	5806793	LCAX1-14H-X			
	D57			90°	5806564	LCAX1-14F-X			
L31	D58 *		5/16"	Straight	5801053	LCAX1-56-X			
	D59			45°	5806794	LCAX1-56H-X			
L32	D60 *			90°	5806566	LCAX1-56F-X			
L34	D61 *		3/8"	Straight	5801055	LCAX1-38-X			
	D62			45°	5806795	LCAX1-38H-X			
L33	D63 *			90°	5806568	LCAX1-38F-X			
L77	D64 *		1/2"	Straight	5801073	LCAX1-12-X			
	D65			45°	5806796	LCAX1-12H-X			
L35	D66 *			90°	5806569	LCAX1-12F-X			
L40	D67 *	1/0	1/4"	Straight	5801074	LCAX1/0-14-X	PANDUIT CT-3001	PINK P42	Strip Length = 18 mm Number of Crimps = 2
	D68			45°	5806797	LCAX1/0-14H-X			
	D69			90°	5806573	LCAX1/0-14F-X			
L41	D70 *		5/16"	Straight	5801076	LCAX1/0-56-X			
	D71			45°	5806798	LCAX1/0-56H-X			
	D72			90°	5806623	LCAX1/0-56F-X			
L43	D73 *		3/8"	Straight	5801077	LCAX1/0-38-X			
	D74			45°	5806799	LCAX1/0-38H-X			
L44	D75 *			90°	5806625	LCAX1/0-38F-X			
L45	D76 *		1/2"	Straight	5801078	LCAX1/0-12-X			
	D77			45°	5806800	LCAX1/0-12H-X			
	D78 *			90°	5806626	LCAX1/0-12F-X			

UNINSULATED FERRULES

X-Ref OLD Husky Code	Husky Code	I.D. (mm)	Length (mm)	HPN	Panduit #	Crimp Tool	Die Code	# of Crimps
NF	UF10 *	8.3	18	5800967	F86-18	GREENLEE K28GL	2 AWG	2
	UF11 *		25	5800969	F86-25			2
	UF12 *		32	5800970	F86-32			3
NF	UF13 *	10.3	18	5800971	F87-18	PANDUIT CT-3001	CD-2001-F87	1
	UF14 *		25	5800973	F87-25			
	UF15 *		32	5800974	F87-32			
NF	UF13 *	10.3	18	5800971	F87-18	PANDUIT CT-3001	CD-2001-F87	1
	UF14 *		25	5800973	F87-25			
	UF15 *		32	5800974	F87-32			

SWI-2540 DLO Compression Lug Crimping Guidelines

SWI-2541 DLO Small Ferrule Crimping Guidelines

SWI-2542 DLO Large Ferrule Crimping Guidelines

SWI-2551 DLO Installation Guidelines

* = Bin Stock

HUSKY®

MACHINE MODEL
UNIVERSAL MASTER

	Name	Date	Time
Edited	cfleetwo	12/21/2018	1:21:22 PM
Appr			
Checked			
Original			

DESCRIPTION
DLO DETAILS

PROJECT =WIRE +
MACHINE
DRAWING NO. UNIVERSAL MASTER
Sheet 3
Total 23

DLO CABLES

Gage	HPN	O.D. (mm)
2/0	725728	Insulated Conductor 18.5 Bare Conductor 11.8
3/0	725729	Insulated Conductor 20.3 Bare Conductor 13.6
4/0	725730	Insulated Conductor 21.3 Bare Conductor 14.8

COMPRESSION LUGS

X-Ref OLD Husky Code	Husky Code	Lug Gage	Hole Size	Angle	HPN	Panduit #	Crimp Tool	Die Code	Crimp Details
	D79	2/0	1/4"	Straight	5801079	LCAX2/0-14-X	PANDUIT CT-3001	BLACK P45	Strip Length = 21 mm Number of Crimps = 2
	D80			45°	5806802	LCAX2/0-14H-X			
	D81			90°	5806628	LCAX2/0-14F-X			
L50,L82	D82 *		5/16"	Straight	5801086	LCAX2/0-56-X			
	D83			45°	5806803	LCAX2/0-56H-X			
L53	D84 *			90°	5806631	LCAX2/0-56F-X			
L51	D85 *		3/8"	Straight	5801088	LCAX2/0-38-X			
	D86			45°	5806804	LCAX2/0-38H-X			
L52	D87 *			90°	5806632	LCAX2/0-38F-X			
L83	D88 *		1/2"	Straight	5801090	LCAX2/0-12-X			
	D89			45°	5806805	LCAX2/0-12H-X			
	D90 *			90°	5806633	LCAX2/0-12F-X			
	D94	3/0	1/4"	Straight	5801093	LCAX3/0-14-X	PANDUIT CT-3001	ORANGE P50	Strip Length = 23 mm Number of Crimps = 2
	D95			45°	5806807	LCAX3/0-14H-X			
	D96			90°	5806635	LCAX3/0-14F-X			
L49,L79	D97 *		5/16"	Straight	5801094	LCAX3/0-56-X			
	D98			45°	5806808	LCAX3/0-56H-X			
L56	D99 *			90°	5806673	LCAX3/0-56F-X			
L58	D100*		3/8"	Straight	5801095	LCAX3/0-38-X			
	D101			45°	5806809	LCAX3/0-38H-X			
L57	D102*			90°	5806676	LCAX3/0-38F-X			
L80	D103*		1/2"	Straight	5801097	LCAX3/0-12-X			
	D104			45°	5806811	LCAX3/0-12H-X			
	D105			90°	5806677	LCAX3/0-12F-X			
	D106		5/8"	Straight	5801098	LCAX3/0-58-X			
	D107			45°	5806812	LCAX3/0-58H-X			
	D108*			90°	5806678	LCAX3/0-58F-X			
	D109	4/0	1/4"	Straight	5801100	LCAX4/0-14-X	PANDUIT CT-3001	PURPLE P54	Strip Length = 26 mm Number of Crimps = 2
	D110			45°	5806813	LCAX4/0-14H-X			
	D111			90°	5806682	LCAX4/0-14F-X			
L61	D112*		5/16"	Straight	5801101	LCAX4/0-56-X			
	D113			45°	5806814	LCAX4/0-56H-X			
	D114*			90°	5806684	LCAX4/0-56F-X			
L62	D115*		3/8"	Straight	5801121	LCAX4/0-38-X			
	D116			45°	5806815	LCAX4/0-38H-X			
L63	D117*			90°	5806685	LCAX4/0-38F-X			
L65,L81	D118*		1/2"	Straight	5801122	LCAX4/0-12-X			
	D119			45°	5806816	LCAX4/0-12H-X			
L64	D120*			90°	5806686	LCAX4/0-12F-X			
	D121		5/8"	Straight	5801123	LCAX4/0-58-X			
	D122			45°	5806817	LCAX4/0-58H-X			
	D123			90°	5806688	LCAX4/0-58F-X			

UNINSULATED FERRULES

X-Ref OLD Husky Code	Husky Code	I.D. (mm)	Length (mm)	HPN	Panduit #	Crimp Tool	Die Code	# of Crimps
NF	UF16 *	12.5	25	5800976	F89-25	PANDUIT CT-3001	CD-2001-F89	1
	UF17 *		32	5800978	F89-32			
NF	UF18 *	14.5	25	5800979	F90-25	PANDUIT CT-3001	CD-2001-F90	1
	UF19 *		32	5800980	F90-32			
NF	UF20 *	16.5	32	5800995	F91-32	PANDUIT CT-3001	CD-2001-F91	1
	UF21 *		40	5800998	F91-40			

BOLT HOLE SIZE	
USA	METRIC
#10	M5
1/4"	M6
5/16"	M8
3/8"	M10
1/2"	M12
5/8"	M16

SWI-2540 DLO Compression Lug Crimping Guidelines

SWI-2541 DLO Small Ferrule Crimping Guidelines

SWI-2542 DLO Large Ferrule Crimping Guidelines

SWI-2551 DLO Installation Guidelines

* = Bin Stock

HUSKY®

MACHINE MODEL
UNIVERSAL MASTER

	Name	Date	Time
Edited	cfleetwo	1/18/2019	1:56:37 PM
Appr			
Checked			
Original			

DESCRIPTION
DLO DETAILS

PROJECT =WIRE +
MACHINE
DRAWING NO. UNIVERSAL MASTER
Sheet 4
Total 23

DLO CABLES

Gage	HPN	O.D. (mm)
262 kcmil	725731	Insulated Conductor 23.9 Bare Conductor 15.7
313 kcmil	725732	Insulated Conductor 25.3 Bare Conductor 17.0
373 kcmil	2568920	Insulated Conductor 27.0 Bare Conductor 18.7

COMPRESSION LUGS

X-Ref OLD Husky Code	Husky Code	Lug Gage	Hole Size	Angle	HPN	Panduit #	Crimp Tool	Die Code	Crimp Details
L66	D124*	262 kcmil	5/16"	Straight	5801125	LCAX250-56-X	PANDUIT CT-3001	YELLOW P62	Strip Length = 26 mm Number of Crimps = 2
	D125			45°	5806819	LCAX250-56H-X			
	D126			90°	5806689	LCAX250-56F-X			
L67	D127*		3/8"	Straight	5801128	LCAX250-38-X			
	D128			45°	5806820	LCAX250-38H-X			
L69	D129*			90°	5806724	LCAX250-38F-X			
	D130*		1/2"	Straight	5801129	LCAX250-12-X			
	D131			45°	5806821	LCAX250-12H-X			
L68	D132*			90°	5806725	LCAX250-12F-X			
	D133		5/8"	Straight	5801130	LCAX250-58-X			
	D134			45°	5806822	LCAX250-58H-X			
	D135			90°	5806727	LCAX250-58F-X			
L78	D136*	313 kcmil	3/8"	Straight	5801131	LCAX300-38-6	PANDUIT CT-3001	RED P71	Strip Length = 30 mm Number of Crimps = 2
	D137			45°	5806823	LCAX300-38H-6			
	D138			90°	5806731	LCAX300-38F-6			
L71	D139*		1/2"	Straight	5801132	LCAX300-12-6			
	D140			45°	5806824	LCAX300-12H-6			
	D141			90°	5806734	LCAX300-12F-6			
	D142		5/8"	Straight	5801134	LCAX300-58-6			
	D143			45°	5806825	LCAX300-58H-6			
	D144			90°	5806735	LCAX300-58F-6			
L307	D145*	373 kcmil	3/8"	Straight	5801135	LCAX350-38-6	PANDUIT CT-3001	BLUE P76	Strip Length = 33 mm Number of Crimps = 2
	D146			45°	5806827	LCAX350-38H-6			
	D147			90°	5806737	LCAX350-38F-6			
	D148*		1/2"	Straight	5801136	LCAX350-12-6			
	D149			45°	5806829	LCAX350-12H-6			
	D150			90°	5806741	LCAX350-12F-6			
	D151		5/8"	Straight	5801137	LCAX350-58-6			
	D152			45°	5806830	LCAX350-58H-6			
	D153			90°	5806742	LCAX350-58F-6			

UNINSULATED FERRULES

X-Ref OLD Husky Code	Husky Code	I.D. (mm)	Length (mm)	HPN	Panduit #	Crimp Tool	Die Code	# of Crimps
	UF20 *	16.5	32	5800995	F91-32	PANDUIT CT-3001	CD-2001-F91	1
	UF21 *		40	5800998	F91-40			
	UF22 *	18.5	32	5801000	F92-32	PANDUIT CT-3001	CD-2001-F92	1
	UF23 *		38	5801002	F92-38			
	UF24 *	20.0	32	5801006	F93-32	PANDUIT CT-3001	CD-2001-F93	1
	UF25 *		40	5801008	F93-40			

SWI-2540	DLO Compression Lug Crimping Guidelines
SWI-2541	DLO Small Ferrule Crimping Guidelines
SWI-2542	DLO Large Ferrule Crimping Guidelines
SWI-2551	DLO Installation Guidelines

BOLT HOLE SIZE	
USA	METRIC
#10	M5
1/4"	M6
5/16"	M8
3/8"	M10
1/2"	M12
5/8"	M16

* = Bin Stock

HUSKY®

MACHINE MODEL
UNIVERSAL MASTER

	Name	Date	Time
Edited	cfleetwo	12/21/2018	1:21:22 PM
Appr			
Checked			
Original			

DESCRIPTION
DLO DETAILS

PROJECT	=WIRE	+
MACHINE	Sheet	Total
DRAWING NO. UNIVERSAL MASTER	5	23

VL Breakers (3-Pole)

* = Compression lug on backside of breaker pad

BREAKERS		BREAKER LUGS			MOUNTING BOLTS		UNINSULATED FERRULES					FLEXIBLE BUSBAR				COMPRESSION LUGS / BUSBAR			
Type	SIZE (A)	Type	HPN	# of Conn.	Torque lb-in	Torque N-m	AWG	Strip (mm)	Torque AWG	Torque lb-in	Torque N-m	Max Width (mm)	Thickness (mm)	Torque lb-in	Torque N-m	Max Width (mm)	Bolt Size	Torque lb-in	Torque N-m
VL150X CG	20-150	3VL9120-4TC31	5990365	1	N/A		14 - 1/0	15	14 - 8	35	4	9	3 - 6	71	8	N/A			
									6 - 1/0	71	8								
		3VL9100-4TA31	6008067	1			N/A					N/A				15	M6	53	6
VL150 DG	50-150	3VL9220-4TC31	5990367	1	N/A		8 - 2/0	15	8	35	4	9	3 - 6	71	8	N/A			
									6 - 2/0	71	8								
		3VL9202-4TP01	6340908	1	44	5	14 - 4	13	14 - 8	35	4	N/A							
		3VL9202-4TP31	6891125	1				22	6 - 1	62	7								
				1				32											
		3VL9200-4TA31	6008055	1	N/A		N/A					N/A				15	M6	53	6
VL250 FG	100-250	3VL9335-4TC31	5990417	1	N/A		2 - 313	22	2 - 313	221	25	15	4 - 10	221	25	N/A			
		3VL9302-4TP01	5633246	1	44	5	14 - 2	15	14 - 8	44	5	N/A							
		3VL9302-4TP31	6891082	1				25	6 - 1/0	137	15.5								
				1			12 - 1/0	42											
		3VL9300-4TA31	6008057	1	N/A		N/A					N/A				20	M8	89	10
		3VL9300-4EC30	8772739	1*	89	10	N/A					N/A				20	M10	177	20
VL400 JG	250-400	3VL9460-4TC31	5990442	1	N/A		1/0 - 373	36	1/0 - 373	310	35	25	3 - 10	310	35	N/A			
		3VL9400-4TA31	6008058	1			N/A					N/A				25	M8	133	15
		3VL9400-4TA51	7044242																
		3VL9460-4TF30	7404990	1	133	15	2/0 - 373	25	2/0 - 373	372	42	N/A				N/A			
				1				50											
		3VL9475-4TD31	5954893	1			3/0 - 373	27	3/0 - 262	275	31								
	Shared								313 - 373	500	56.5								
		3VL9402-4TP01	4581830	2			14 - 1/0	16	14 - 10	35	4								
		3VL9402-4TP31	6895293	2				32	8	40	4.5								
				2				32	6 - 1/0	120	13.5								
		3VL9400-4EC30	8772381	1*	133	15	N/A					N/A				25	M10	177	20
VL400X LG	400-600	3VL9460-4TA31	6008060	1	N/A		N/A					N/A				25	M10	221	25
		3VL9460-4TA51	7044290																
VL800 MG	600-800	3VL9650-4TG31	5832899	1	133	15	4/0 - 373	25	4/0 - 373	375	42.4	N/A				N/A			
				2				50											
		HUSKY	6528772	1	N/A		N/A									30	M10	221	25
		3VL9600-4TA31	6167324	1	N/A		N/A									40	M8 (x2)	212	24

VL Breakers (4-Pole)

BREAKERS		BREAKER LUGS			UNINSULATED FERRULES					FLEXIBLE BUSBAR				COMPRESSION LUGS / BUSBAR			
Type	SIZE (A)	Type	HPN	# of Conn.	AWG	Strip (mm)	Torque AWG	Torque lb-in	Torque N-m	Max Width (mm)	Thickness (mm)	Torque lb-in	Torque N-m	Max Width (mm)	Bolt Size	Torque lb-in	Torque N-m
VL160N DG	40-160	3VL9200-4TC40	6083118	1	14 - 1/0	21	14 - 8	35	4	9	3 - 6	71	8	N/A			
							6 - 1/0	71	8								
		3VL9216-4TA40	6008064	1	N/A					N/A				15	M6	53	6
VL250N FG	160-250	3VL9300-4TC40	6083119	1	4 - 4/0	24	4 - 4/0	106	12	15	4 - 10	106	12	N/A			
		3VL9300-4TA40	6008065	1	N/A					N/A				20	M8	89	10
VL400N JG	160-400	3VL9400-4TC40	6083120	1	1 - 373	28	1 - 373	221	25	25	3 - 10	221	25	N/A			
		3VL9400-4TA40	6008066	1	N/A					N/A				25	M8	133	15

WIRE GAGE	
AWG	mm²
26	0.14
24	0.25
22	0.34
20	0.5
19	0.75
18	1.0
16	1.5
14	2.5
12	4
10	6
8	10
6	16
4	25
2	35
1	50

STUD SIZE	
USA	METRIC
#2	M2
#4	M2.5
#5	M3
#6	M3.5
#8	M4
#10	M5
1/4"	M6
5/16"	M8
3/8"	M10
7/16"	M11
1/2"	M12
5/8"	M16

Refer to HS 252 for Mechanical Torque specifcations

DISTRIBUTION BLOCKS

Manufacturer	Part #	HPN	POSTION		# of Conn.	AWG	Strip (mm)	Torque AWG	Torque lb-in	Torque N-m
Cooper Bussman	PDBFS330	5626032	Line		1	6 - 373	32	6 - 373	500	56.5
			Load	Row 1	3	14 - 4	30	6 - 4	45	5.1
				Row 2	3		15	8	40	4.5
								14 - 10	35	4
	PDBFS377	6197174	Line		2	4 - 262	30	4 - 262	275	31
							36			
			Load	Row 1	4	14 - 6	32	6	35	4
				Row 2	4		26	8	25	2.8
				Row 3	4		15	14 - 10	20	2.3
	PDBFS504	8884605	Line / Load		2	1/0 - 373	32	1/0 - 373	500	56.5
	16330-1	746714	Line		1	6 - 373	28	6 - 373	500	56.5
			Load	Row 1	3	14 - 4	27	6 - 4	45	5.1
				Row 2	3		12	8	40	4.5
								14 - 10	35	4
	16370-1 16370-3	2801159 72277	Line		1	6 - 313	25	6 - 313	275	31
			Load	Row 1	4	14 - 6	25	6	35	4
				Row 2	4		16	8	25	2.8
				Row 3	4		12	14 - 10	20	2.3
	16371-1 16371-3	5002820 2246870	Line		1	6 - 313	25	6 - 313	275	31
			Load	Row 1	3	14 - 2	25	* 14 - 2	120	13.5
				Row 2	3	14 - 6	16	6 - 4	45	5.1
				Row 3	3		12	8	40	4.5
								14 - 10	35	4
	16377-2 16377-3	4162385 4155603	Line	Row 1	1	4 - 4/0	25	4 - 4/0	275	31
				Row 2	1		32			
			Load	Row 1	4	14 - 6	25	6	35	4
				Row 2	4		16	8	25	2.8
				Row 3	4		12	14- 10	20	2.3
	16528-1 16528-3	3007511 2466523	Line		2	2 - 373	45	2 - 373	500	56.5
			Load	Row 1	2	6 - 2/0	32	* 6 - 2/0	120	13.5
					2	14 - 6		6	35	4
				Row 2	2	6 - 2/0	16	8	25	2.8
					2	14 - 6		14 - 10	20	2.3

* Larger termination screws

DISTRIBUTION BLOCKS

Manufacturer	Part #	HPN	POSTION		# of Conn.	AWG	Strip (mm)	Torque AWG	Torque lb-in	Torque N-m
Weidmueller	1028500000	7942923	Line		1	M10	N/A	N/A	133	15
			Load		1					
Marathon	1333575CH	8235602	Line		1	2 - 373	40	6 - 373	375	42.4
			Load	Row 1	2	14 - 1	32	6 - 1	120	13.5
				Row 2	2		16	8	40	4.5
								14 - 10	35	4
Ferraz Shawmut	63131	7147588	Line		1	14 - 1/0	17	6 - 1/0	120	13.5
								14 - 8	50	5.6
			Load	Row 1	2	14 - 6	22	6	35	4
				Row 2	2		10	8	25	2.8
								10 - 14	20	2.3

Refer to HS 252 for Mechanical Torque specifcations

CONTACTORS

Manufacturer	Size	Part #	HPN	# of Conn.	Ferrules AWG	Ferrules Strip (mm)	FLEXIBLE BUSBAR Max Width (mm)	FLEXIBLE BUSBAR Thickness (mm)	LUGS / BUSBAR Max Width (mm)	LUGS / BUSBAR Bolt Size	Torque lb-in	Torque N-m
Siemens	S2 3RT203	BOX LUGS ATTACHED		1	18 - 2	13	N/A		N/A		35	4
				2	18 - 4							
	S3 3RT204	BOX LUGS ATTACHED		1	14 - 1	17	9	2.4 - 4.8	N/A		44	5
				2	14 - 2							
		WITHOUT BOX LUGS			N/A		N/A		15	M6		
	S6 3RT105	3RT1955-4G	2600404	1	6 - 2/0	20	15.5	2.4 - 4.8	N/A		97	11
				2	6 - 1/0							
		3RT1956-4G	2600407	1	6 - 262	20	15.5	2.4 - 8				
				2	6 - 3/0							
		WITHOUT BOX LUGS			N/A		N/A		17	M8		
	S10 3RT106	3RT1966-4G	2600408	1	3/0-373	27	24	4.8 - 10	N/A		177	20
				2	2/0-373							
		WITHOUT BOX LUGS			N/A		N/A		25	M10		
	S12 3RT107	3RT1966-4G	2600408	1	3/0-373	27	24	4.8 - 10	N/A		177	20
				2	2/0-373							
		WITHOUT BOX LUGS			N/A		N/A		25	M10		

WIRE GAGE	
AWG	mm²
26	0.14
24	0.25
22	0.34
20	0.5
19	0.75
18	1.0
16	1.5
14	2.5
12	4
10	6
8	10
6	16
4	25
2	35
1	50

OVERLOAD RELAYS

Manufacturer	Size	Part #	HPN	# of Conn.	Ferrules AWG	Ferrules Strip (mm)	LUGS / BUSBAR Max Width (mm)	LUGS / BUSBAR Bolt Size	Torque lb-in	Torque N-m
Siemens	S2 3RU213	BOX LUGS ATTACHED		1	18 - 2	13	N/A		35	4
				2	18 - 4					
	S3 3RU214	BOX LUGS ATTACHED		1	14 - 1	17	N/A		44	5
				2	14 - 2					
	S6 3RB205	RT1955-4G	2600404	1	6 - 2/0	20	N/A		97	11
				2	6 - 1/0					
		RT1956-4G	2600407	1	6 - 262	20				
				2	6 - 3/0					
		WITHOUT BOX LUGS			N/A		15	M8		
	S10 3RB206	RT1966-4G	2600408	1	3/0 - 373	27	N/A		177	20
				2	2/0 - 373					
		WITHOUT BOX LUGS			N/A		25	M10		

STUD SIZE	
USA	METRIC
#2	M2
#4	M2.5
#5	M3
#6	M3.5
#8	M4
#10	M5
1/4"	M6
5/16"	M8
3/8"	M10
7/16"	M11
1/2"	M12
5/8"	M16

Refer to HS 252 for Mechanical Torque specifcations

MOTOR STARTER PROTECTORS

Manufacturer	Size	Part #	HPN	# of Conn.	Ferrules AWG	Ferrules Strip (mm)	LUGS / BUSBAR Max Width (mm)	LUGS / BUSBAR Bolt Size	Torque lb-in	Torque N-m
Siemens	S2 3RV203	BOX LUGS ATTACHED		1	18 - 2	13	N/A		35	4
				2	18 - 4					
	S3 3RV204 3RV274	BOX LUGS ATTACHED		1	14 - 1	17	N/A		44	5
				2	14 - 2					
		WITHOUT BOX LUGS			N/A		15	M6		

MACHINE / MOLD HEATS

Manufacturer	Type	Part #	HPN	# of Conn.	Ferrules AWG	Ferrules Strip (mm)	LUGS / BUSBAR Max Width (mm)	LUGS / BUSBAR Bolt Size	Torque lb-in	Torque N-m
Siemens	5SY4	(1,2,3)-Pole		2	14 - 4	15	N/A		27	3
	SITOP	6EP1437-3BA10 6EP4137-3AB00	8098974 7829488	2	14 - 6	12			11	1.2
Wohner	AES-CC	31298 31299 31300	4985144 4985089 4986413	1	14 - 8	11			20	2.3
					6 - 4				25	2.8
	CTB-T35	31550	4985169	1	10 - 1/0	15			50	5.6
ABA	6 Slot	ICC3.2	7869129	1	N/A		15	M5	20	2.3

PE CONNECTIONS

Manufacturer	Part #	HPN	# of Conn.	AWG	Strip (mm)	Bolt Size	Torque lb-in	Torque N-m
Brumall	1024-R0	2172625	1	6 - 262	22	N/A	375	42.4
			24	8	10		40	4.5
				14 - 10			35	4
Hoffman	10 Hole PE busbar	2617195	8	N/A		M8	89	10
			2			M10	177	20
	6 Hole PE busbar	3086616	3	N/A		M8	89	10
			3			M10	177	20
	PE stud	N/A	1	N/A		M6	20	2.3

BUSBAR CONNECTION ADAPTORS

Manufacturer	Part #	HPN	# of Conn.	AWG	Max Busbar (mm)	Strip (mm)	Torque lb-in	Torque N-m
Wohner	01069	6251136	1	N/A	32 x 10	35	133	15
	01538	5960823	1	N/A	32 x 20	45	266	30
	01537	6529891	1	3/0 - 373	N/A	45	266	30
	01147	7861105	1	3/0 - 373	N/A	45	266	30
	01240	6679232	1	10 - 2/0	N/A	25	80	9
	01243	6257177	1	6 - 4/0	N/A	25	120	13.5
	32146	8010682	2	12 - 6	N/A	15	27	3

BUSBAR MOUNTING ADAPTORS

	Part #	HPN	# of Conn.		Torque lb-in	Torque N-m		Torque lb-in	Torque N-m
Wohner	32976	5945274	1	MOUNTING BOLTS	71	8	LINE SIDE TUBES	71	8
	32977	5960821	1		71	8		89	10
	32975	5960822	1		106	12		221	25
	32578	7851456	1		71	8		80	9
	32579	7851457	1		106	12		177	20
	32981	6077583	1		1.8	0.2	Preinstalled 4 AWG wire leads		

Refer to HS 252 for Mechanical Torque specifcations

LINE FILTERS

				POWER CONNECTIONS					PE CONNECTION		
Manufacturer	Part #	HPN	Size	max. AWG	Strip (mm)	Bolt Size	Torque lb-in	Torque N-m	Bolt Size	Torque lb-in	Torque N-m
BAUMULLER (A211)	BFN 3-1-030-001	2351717	30A	8	9	N/A	9	1	M5	18	2
	BFN 3-1-042-001	2351719	42A								
	BFN 3-1-056-001	2351721	56A	6	10		15	1.7	M6	35	4
	BFN 3-1-075-001	2351722	75A	4	19		35	4			
	BFN 3-1-100-001	2351723	100A	1	24		62	7	M10	53	6
	BFN 3-1-130-001	2351724	130A								
	BFN 3-1-180-001	2351726	180A	3/0	27		142	16			
	BFN 3-1-250-001	4683445	250A	N/A		M10	142	16		142	16
	BFN 3-1-270-001	2620271	270A			M12	221	25		53	6
	BFN 3-1-320-001	4570913	320A			M10	142	16	Same as POWER CONNECTIONS		
	BFN 3-1-400-001	4684162	400A								
	BFN 3-1-600-001	4684158	600A								
SIEMENS (A211)	6SL3203-0BE31-1BA0	7375741	37kW	2	24	N/A	62	7	M10	89	10
	6SL3203-0BE32-5AA0	6884295	132kW	N/A		M10	221	25	N/A		

WIRE GAGE	
AWG	mm²
26	0.14
24	0.25
22	0.34
20	0.5
19	0.75
18	1.0
16	1.5
14	2.5
12	4
10	6
8	10
6	16
4	25
2	35
1	50

STUD SIZE	
USA	METRIC
#2	M2
#4	M2.5
#5	M3
#6	M3.5
#8	M4
#10	M5
1/4"	M6
5/16"	M8
3/8"	M10
7/16"	M11
1/2"	M12
5/8"	M16

Refer to HS 252 for Mechanical Torque specifcations

LINE REACTORS

				POWER CONNECTIONS					PE CONNECTION		
Manufacturer	Part #	HPN	Size	max. AWG	Strip (mm)	Bolt Size	Torque lb-in	Torque N-m	Bolt Size	Torque lb-in	Torque N-m
BAUMULLER (A218)	BK3-0040/0050-001	6344019	40A	N/A		M6	53	6	Same as POWER CONNECTIONS		
	BK3-0065/0080-001	5831222	65A								
	BK3-0080/0100-001	5831202	80A			M8	106	12			
	BK3-0115/0140-001	4922039	115A			M10	133	15	M8	106	12
	BK3-0165/0200-001	4684155	165A								
	BK3-0195/0240-001	4921887	195A								
	BK3-0275/0340-001	4121316	275A								
	BK3-0365/0450-001	4420121	365A			M12	177	20			
	BK3-0450/0550-001	4922113	450A								
	BK3-0615/0750-001	4684150	615A								
	DR3-50-4-0200-001	2602507	200A	N/A		M10	133	15	M8	106	12
	DR3-50-4-0300-001	2683433	300A								
	DR3-50-4-0400-001	2602511	400A			M12	177	20	M10	133	15
SIEMENS (A194)	6SL3000-0DE21-6AA0	4858572	16 kW	6	14	N/A	11	1.2	Same as POWER CONNECTIONS		
	6SL3000-0DE23-6AA0	4858565	36 kW	2	19		22	2.5			
	6SL3000-0DE25-5AA1	3687230	55 kW	1/0	24		62	7			
	6SL3000-0DE28-0AA1	4858569	80 kW	4/0	35		SPRING CLAMP		M10	221	25
	6SL3000-0DE31-2AA1	4858567	120 kW								

WIRE GAGE	
AWG	mm²
26	0.14
24	0.25
22	0.34
20	0.5
19	0.75
18	1.0
16	1.5
14	2.5
12	4
10	6
8	10
6	16
4	25
2	35
1	50

STUD SIZE	
USA	METRIC
#2	M2
#4	M2.5
#5	M3
#6	M3.5
#8	M4
#10	M5
1/4"	M6
5/16"	M8
3/8"	M10
7/16"	M11
1/2"	M12
5/8"	M16

Refer to HS 252 for Mechanical Torque specifcations

ACTIVE INTERFACE MODULES

				POWER CONNECTIONS					PE CONNECTION		
Manufacturer	Part #	HPN	Size	max. AWG	Strip (mm)	Bolt Size	Torque lb-in	Torque N-m	Bolt Size	Torque lb-in	Torque N-m
SIEMENS (A195)	6SL3100-0BE21-6AB0	4959543	16 kW	6	14	N/A	15	1.7	M8	115	13
	6SL3100-0BE23-6AB0	5854353	36 kW	1/0	24		53	6			
	6SL3100-0BE25-5AB0	4021256	55 kW								
	6SL3100-0BE28-0AB0	4021251	80 kW	N/A		M8	115	13			
	6SL3100-0BE31-2AB0	4021250	120 kW								

WIRE GAGE	
AWG	mm²
26	0.14
24	0.25
22	0.34
20	0.5
19	0.75
18	1.0
16	1.5
14	2.5
12	4
10	6
8	10
6	16
4	25
2	35
1	50

ACTIVE LINE MODULES

				POWER CONNECTIONS					PE CONNECTION		
Manufacturer	Part #	HPN	Size	max. AWG	Strip (mm)	Bolt Size	Torque lb-in	Torque N-m	Bolt Size	Torque lb-in	Torque N-m
SIEMENS (A20)	6SL3130-7TE21-6AA4	4959545	16 kW	8	12	N/A	15	1.7	M5	27	3
	6SL3130-7TE23-6AA3	5682121	36 kW	N/A		M6	53	6	M6	53	6
	6SL3130-7TE25-5AA3 6SL3131-7TE25-5AA3	5808068 7260842	55 kW			M8	115	13			
	6SL3130-7TE28-0AA3 6SL3131-7TE28-0AA3	3890439 6849701	80 kW						M8	115	13
	6SL3130-7TE31-2AA3 6SL3131-7TE31-2AA3	3869320 6849702	120 kW								
	6SL3162-2BM01-0AA0	3869348	DC link	4/0	25	N/A	115	13	Busbar Screw (1.8 Nm)		

STUD SIZE	
USA	METRIC
#2	M2
#4	M2.5
#5	M3
#6	M3.5
#8	M4
#10	M5
1/4"	M6
5/16"	M8
3/8"	M10
7/16"	M11
1/2"	M12
5/8"	M16

Refer to HS 252 for Mechanical Torque specifcations

SERVO DRIVES

				POWER CONNECTIONS					PE CONNECTION		
Manufacturer	Part #	HPN	Size	max. AWG	Strip (mm)	Bolt Size	Torque lb-in	Torque N-m	Bolt Size	Torque lb-in	Torque N-m
BAUMULLER (209)	BM4435	8425223	60A	4	16	N/A	18	2	Same as POWER CONNECTIONS		
	BM4443	8425143	80A	1	24	N/A	62	7			
	BM4444	8098421	100A								
	BM4445	8098423	130A								
	BM4446	8098425	150A								
	BM4453	8098510	150A	N/A		M8	106	12			
	BM4454	8098511	210A								
	BM4462	8098635	250A			M10	133	15			
	BM4463	8098636	300A								
	BM4466	8098637	350A								
	BM4472	8098684	450A								
	BM4473	8098685	594A								
SIEMENS (A23) (A235) (A41, A42) (A55)	6SL3120-1TE24-5AA3 6SL3121-1TE24-5AA3	3869422 7260827	45 A	N/A		M6	53	6	M6	53	6
	6SL3120-1TE26-0AA3 6SL3121-1TE26-0AA3	4870136 6849696	60 A								
	6SL3120-1TE28-5AA3 6SL3121-1TE28-5AA3	4054901 6849698	85 A			M8	115	13		115	13
	6SL3120-1TE31-3AA3 6SL3121-1TE31-3AA3	4054899 6849699	132 A						M8		
	6SL3120-1TE32-0AA4 6SL3121-1TE32-0AA4	3869421 6849700	200 A								
	6SL3210-1PE27-5UL0	7251771	37 kW	2	18	N/A	35	4	Same as POWER CONNECTIONS		FSD
	6SL3210-1PE31-1UL0	7251769	55 kW	2/0	25	N/A	80	9			FSE
	6SL3210-1PE31-8UL0	7162332	90 kW	N/A		M10	212	24			FSF
	6SL3210-1PE32-5UL0	6852710	132 kW								

WIRE GAGE	
AWG	mm²
26	0.14
24	0.25
22	0.34
20	0.5
19	0.75
18	1.0
16	1.5
14	2.5
12	4
10	6
8	10
6	16
4	25
2	35
1	50

STUD SIZE	
USA	METRIC
#2	M2
#4	M2.5
#5	M3
#6	M3.5
#8	M4
#10	M5
1/4"	M6
5/16"	M8
3/8"	M10
7/16"	M11
1/2"	M12
5/8"	M16

Refer to HS 252 for Mechanical Torque specifcations

SERVO MOTORS

				POWER CONNECTIONS					PE CONNECTION			
Manufacturer	Part #	HPN	Motor Size	max. AWG	Strip (mm)	Bolt Size	Torque lb-in	Torque N-m	Bolt Size	Torque lb-in	Torque N-m	Cable Entry Ø
BAUMULLER	DS2-100BO54W-30-5	8012949	100	4	18	N/A	40	4.5	M8	53	6	M40 x 1 M16 x 1
	DS2-100BO54W-20-5	8135668										
	DS2-100BO54W-20-5	8008540		N/A		M8	53	6	Same as POWER CONNECTIONS			M40 x 1 M25 x 1
	DS2-100LO54W-20-5	8008538										
	DS2-100MO54W-30-5	8008338										M40 x 2 M25 x 2
	DS2-100BO54W-30-5	8008351										
	DS2-100KO54W-30-5	8008324										
	DS2-100LO54W-30-5	8008350										
	DS2-132MO54W-20-5	8025038	132									M40 x 2 M25 x 1
	DS2-132ML54W-30-5	8010220				M10	89	10				M63 x 2 M25 x 1
	DS2-132BO54W-30-5	8012942										
	DS2-132BO54W-30-5	8008353										M63 x 4 M25 x 2
	DS2-132LO54W-30-5	8008354										
	DS2-132MO54W-30-5	8008356										
	DS2-132ML54W-30-5	8008355										
	DS2-132MO54W-30-5	8012948										M50 x 2 M16 x 1

WIRE GAGE	
AWG	mm²
26	0.14
24	0.25
22	0.34
20	0.5
19	0.75
18	1.0
16	1.5
14	2.5
12	4
10	6
8	10
6	16
4	25
2	35
1	50

STUD SIZE	
USA	METRIC
#2	M2
#4	M2.5
#5	M3
#6	M3.5
#8	M4
#10	M5
1/4"	M6
5/16"	M8
3/8"	M10
7/16"	M11
1/2"	M12
5/8"	M16

Refer to HS 252 for Mechanical Torque specifcations

SERVO MOTORS

				POWER CONNECTIONS					PE CONNECTION			
Manufacturer	Part #	HPN	Motor Size	max. AWG	Strip (mm)	Bolt Size	Torque lb-in	Torque N-m	Bolt Size	Torque lb-in	Torque N-m	Cable Entry Ø
BAUMULLER	DS2-160BO54W-30-5	8008357	160	N/A		M10	89	10	Same as POWER CONNECTIONS			64 x 4 25.5 x 2
	DS2-160LO54W-30-5	8008358										
	DS2-160MO54W-30-5	8008366										
	DS2-160LO54W-30-5	8012946										64 x 2 25.5 x 1
	DS2-160BO54W-30-5	8012947										
	DS2-160KO54W-30-5	8012944										64 x 1 25.5 x 1
	DS2-160MO54W-30-5	8012945										
	DS2-200LO54W-27-5	8020273	200									51 x 4 16.5 x 1
	DS2-200MO54W-27-5	8020002										

WIRE GAGE	
AWG	mm²
26	0.14
24	0.25
22	0.34
20	0.5
19	0.75
18	1.0
16	1.5
14	2.5
12	4
10	6
8	10
6	16
4	25
2	35
1	50

PUMP MOTORS

Data Sheets

			POWER CONNECTIONS					PE CONNECTION				
Manufacturer	HP	# of Conn.	AWG	Strip (mm)	Bolt Size	Torque lb-in	Torque N-m	AWG	Strip (mm)	Torque lb-in	Torque N-m	Cable Entry Ø
EMOD	20 - 60	6	N/A		M8	53	6	10 - 1/0	20	71	8	Pg13 x 7 Pg11 x 2
	60 - 100											Pg16 x 7 Pg11 x 2
	100 - 125	6			M10	89	10	1 - 373				Pg21 x 7 Pg11 x 2
	125 - 150	6			M12	137	15.5					
	200 - 250	6	4 - 4/0	35	N/A	Cage Clamp *		Same as POWER CONNECTIONS				M40 x 7 M20 x 1
	200 - 600	12										M32 x 13 M20 x 1

* WAGO TYPE 285-195 -> USE BARE DLO (NO STOPPER)

STUD SIZE	
USA	METRIC
#2	M2
#4	M2.5
#5	M3
#6	M3.5
#8	M4
#10	M5
1/4"	M6
5/16"	M8
3/8"	M10
7/16"	M11
1/2"	M12
5/8"	M16

Refer to HS 252 for Mechanical Torque specifcations

CLASS A --> Electrical threaded connections (>30A)	
#	Connection Type
1	DLO Conductors
2	Non DLO Conductors (>=8AWG)
3	Flexible Busbars
4	Busbar Connection / Mounting Adaptors
5	Comb-Type Busbars
6	Main Breaker Lug Mounting Bolts

CLASS A NOTES:

All Class A connections shall use Torque Record Report

CLASS A TORQUE RECORD REPORT
Lookup torque values must be predefined prior to assembly
Operator to record name for each torqued connection point
Inspector to record name for each verification point
This report is a CTQ supplier deliverable
This report will be available for post build reference
Refer to SWI-2551

Torque value reference:

1. Husky DLO Tables
2. HS252
3. Specials -> OEM installation guide

CLASS B --> Electrical threaded connections (<=30A)	
#	Connection Type
1	Non DLO Conductors (<=10AWG)
2	Distribution Blocks (load side)
3	5SY Circuit Breakers
4	AES-CC Fuse holders
5	Control Transformers *
6	DC power supplies *
7	Buffer Module *
8	RV surge suppressors *
9	Outlets *
10	Control Relays *
11	Heat Exchangers *
12	Grounding Studs
13	Bonding Straps

CLASS B NOTES:

All Class B connections shall be tightened and tug tested
* Future design change to spring cage terminals

CLASS C --> Device Mounting	
#	Mounting Type
1	Busbar supports
2	Busbar Adaptors
3	Breakers
4	Breaker Handles
5	Distribution Blocks
6	Contactors
7	Line Filters
8	Line Reactors
9	Servo Drives
10	Heat Sink
11	Solid State Relays
12	Altanium Components
13	IPC / Battery
14	Din Rail
15	Wire Duct
16	Connector bulkheads / hoods
17	Strain Relieves / Gland Plates
18	Enclosure - Accessories
19	Adaptor plates
20	Current Transformers

MTW(机器内部线)HPN总览

要求等级 -> MTW (UL) TEW (CSA) 600V 105°C - flexible stranding

颜色	代码	20AWG	18AWG	16AWG	14AWG	12AWG	10AWG	8AWG	6AWG	4AWG	2AWG
黑色	黑色		739786	72063	9332	659869	71088	73261	71086		
红色	红色		633106	9326	7783	659870	72060	73317			
蓝色	蓝色	2766310	633105	9325	70231	659871	72061	73319			
淡蓝色	淡蓝色				2293703	2184015	2184014	2316039	6205418		
黄绿色	黄绿色	2382529	739787	200418	72311	659874	72312	632386	72313	632387	632388
橙色	橙色		2184016	2095049	2295943						
白色	白色		633107	12514	71371	2069568	73262	73263			
灰色	灰色		6392153								
灰/白色	灰白色		6392154								

注意:
1) 长度反馈向上舍入到最近 10cm增量
2) 端子标记 "---" 不需要端子
3) 端子标记 "SC" 焊接连接
4)端子代码"Cxx"表示压接触点HPN位于设备BOM中
5) 端子号为"HF"的端子和18AWG线压接用于高集成模块终端, 这需要操作员返工 HEX crimp pliers
6) DLO = Diesel Locomotive Cable
7)DLO电缆只是合适的制作, 不是所有的长度需要被提供
8) 参照 HS 14 Table 1 UL / EN 电流参照表
9) 端子使用DIN标准颜色代码

套圈

代码	AWG	类型	HPN
F	24	黄色	2218633
F	22	蓝绿色	2219176
F	20	白色	648307
F (HF)	18	红色	2220698
F	16	黑色	644619
F	14	蓝色	5834805
F	12	灰色	5834806
F	10	黄色	5834808
F	8	红色	654877
F	6	蓝色	2218632

套圈 (非绝缘)

代码	AWG	类型	HPN
UF	24	5mm	5836256
UF	22	6mm	5836258
UF	20	6mm	5836260
UFL	20	10mm	5836260
UF	18	8mm	5836263
UFL	18	10mm	6025763
UF	16	10mm	5836264
UF	14	10mm	5836265
UF	12	12mm	5836268
UF	10	12mm	5836269

环形接线端子

代码	AWG	颜色	尺寸	HPN
R1	22-16	红色	#4	2218770
R2			#6	2218792
R3			#8	2218797
R4			#10	721023
R28			1/2"	2419923
R30			1/4"	2383970
R11	18-14	蓝色	#4	2218800
R12			#6	2218808
R13			#8	2218810
R15			#10	2218811
R29			1/4"	2424865
R32			5/16"	3351291
R16			3/8"	2389180
R21	12-10	黄色	#6	2218813
R22			#8	2218814
R23			#10	2218815
R24			1/4"	2218816
(D)R31			5/16"	2961498
R25			3/8"	2218817
R33		Hi-Temp	#10	4993868

铲形端子 (母头)

代码	AWG	颜色	尺寸	HPN
S0	22-18	红色	.110"	9805050
S1			.187"	2219019
S2			.250"	2505965
S6	16-14	蓝色	.110"	2374139
(D)S3			.187"	3109466
(D)S7			.250"	2273871
S8			.250" 90°	9786509
S11	12-10	黄色	.250"	2219024
S12			.250" 90°	720817

套圈 (双线)

代码	AWG	类型	HPN
DF	20	白色	6628161
DF	18	红色	2218660
DF	16	黑色	2218663
DF	14	蓝色	2218664
DF	12	灰色	2218678
DF	10	黄色	2218649
DF	8	红色	6641497
DF	6	蓝色	6641499

Wire规格

AWG	mm²
26	0.14
24	0.25
22	0.34
20	0.5
19	0.75
18	1.0
16	1.5
14	2.5
12	4
10	6
8	10
6	16
4	25
2	35
1	50

STUD SIZE

USA	公制
#2	M2
#4	M2.5
#5	M3
#6	M3.5
#8	M4
#10	M5
1/4"	M6
5/16"	M8
3/8"	M10
7/16"	M11
1/2"	M12
5/8"	M16

叉形端子

代码	AWG	颜色	尺寸	HPN
U19	22-16	红色	#6	2218818
U18	18-14	蓝色	#6	2218820
U1			#8	2218821
U2			#10	2218823
U16	12-10	黄色	#8	2218827
U17			#10	2218828

PFC (塑料软管接头)

HPN	描述
654724	O.D. = 28.5mm (I.D. = 23mm)
654725	O.D. = 34.5mm (I.D. = 29mm)
654726	O.D. = 42.5mm (I.D. = 36mm)
654727	O.D. = 54.5mm (I.D. = 48mm)

PFC接头

HPN	描述
243336	M25, 直头, O.D. = 28.5mm
243337	M32, 直头, O.D. = 34.5mm
243338	M40, 直头, O.D. = 42.5mm
243339	M50, 直头, O.D. = 54.5mm
3301134	M63, 直头, O.D. = 54.5mm
243342	M25, 90°, O.D. = 28.5mm
243345	M32, 90°, O.D. = 34.5mm
243348	M40, 90°, O.D. = 42.5mm
243350	M50, 90°, O.D. = 54.5mm
243351	M63, 90°, O.D. = 54.5mm

DLO 电缆 / 压接端子

线缆规格	HPN	O.D. (mm)	X-Ref 旧的 Husky 代码	Husky 代码	耳型铜端子规格	开孔尺寸	角度	HPN	Panduit #	压接工具	压模代码	压接信息
8 AWG	73261 * MTW not DLO *	N/A	L1,R27	D1 *	8 AWG	#10	直的	5823010	LCAX8-10-L	PANDUIT CT-3001	红色 P21	线缆绝缘剥去长度 = 11 mm 压接数量 = 1
				D2			45°	5823013	LCAX8-10H-L			
				D3			90°	5823016	LCAX8-10F-L			
			L2	D4 *		1/4"	直的	5823017	LCAX8-14-L			
				D5			45°	5823020	LCAX8-14H-L			
				D6			90°	5823023	LCAX8-14F-L			
			L3	D7 *		5/16"	直的	5823026	LCAX8-56-L			
				D8			45°	5823030	LCAX8-56H-L			
				D9			90°	5823031	LCAX8-56F-L			
			L4	D10 *		3/8"	直的	5823032	LCAX8-38-L			
				D11			45°	5823034	LCAX8-38H-L			
				D12			90°	5823036	LCAX8-38F-L			
6 AWG	71086 * MTW not DLO *	N/A	L6	D13 *	6 AWG	#10	直的	5801026	LCAX6-10-L	PANDUIT CT-3001	蓝色 P24	线缆绝缘剥去长度 = 12 mm 压接数量 = 1
				D14			45°	5806776	LCAX6-10H-L			
				D15			90°	5801139	LCAX6-10F-L			
			L5	D16 *		1/4"	直的	5801029	LCAX6-14-L			
				D17			45°	5806777	LCAX6-14H-L			
				D18			90°	5801143	LCAX6-14F-L			
			L8	D19 *		5/16"	直的	5801030	LCAX6-56-L			
				D20			45°	5806778	LCAX6-56H-L			
				D21 *			90°	5801145	LCAX6-56F-L			
			L9	D22 *		3/8"	直的	5801031	LCAX6-38-L			
				D23			45°	5806779	LCAX6-38H-L			
				D24 *			90°	5801148	LCAX6-38F-L			
4 AWG	2564585	绝缘导线11.7 裸导线 6.7		D25	4 AWG	#10	直的	5801032	LCAX4-10-L	PANDUIT CT-3001	灰色 P29	线缆绝缘剥去长度 = 14 mm 压接数量 = 1
				D26			45°	5806780	LCAX4-10H-L			
				D27			90°	5801154	LCAX4-10F-L			
			L12,L20	D28 *		1/4"	直的	5801033	LCAX4-14-L			
				D29			45°	5806781	LCAX4-14H-L			
			L11	D30 *			90°	5801161	LCAX4-14F-L			
			L13,L22	D31 *		5/16"	直的	5801035	LCAX4-56-L			
				D32			45°	5806783	LCAX4-56H-L			
			L25	D33 *			90°	5801164	LCAX4-56F-L			
			L14,L21	D34 *		3/8"	直的	5801036	LCAX4-38-L			
				D35			45°	5806786	LCAX4-38H-L			
			L24	D36 *			90°	5801167	LCAX4-38F-L			

非隔离端子

X-Ref 旧的 Husky 代码	Husky 代码	I.D. (mm)	长度 (mm)	HPN	Panduit #	压接工具	压模代码	压接数量
NF	UF1 *	4.5	12	5822985	F83-12	GREENLEE K28GL	7 AWG	1
	UF2 *		18	5822989	F83-18			2
	UF3 *		25	5823006	F83-25			2
NF			12			GREENLEE K28GL	5 AWG	
	UF4 *	5.8	18	5800956	F84-18			2
	UF5 *		25	5800957	F84-25			2
	UF6 *		32	5800958	F84-32			3
NF			15			GREENLEE K28GL	3 AWG	
	UF7 *	7.3	18	5800963	F85-18			2
	UF8 *		25	5800964	F85-25			2
	UF9 *		32	5800966	F85-32			3

注意:<=6AWG用MTW线 >= 4AWG
用DLO线 DLO线最小弯曲半径
4 x O.D.

SWI-2540 DLO Compression Lug Crimping Guidelines

SWI-2541 DLO Small Ferrule Crimping Guidelines

SWI-2542 DLO Large Ferrule Crimping Guidelines

SWI-2551 DLO Installation Guidelines

螺栓孔尺寸	
USA	公制
#10	M5
1/4"	M6
5/16"	M8
3/8"	M10
1/2"	M12
5/8"	M16

* = Bin Stock

HUSKY®

MACHINE MODEL
UNIVERSAL MASTER

	日期	日期	时间
日期	cfleetwo	12/21/2018	1:21:22 PM
批准			
检查.			
原始设计			

DESCRIPTION
DLO DETAILS

PROJECT	=WIRE	+
MACHINE	Sheet 2	Total 23
DRAWING NO. UNIVERSAL MASTER		

DLO 电缆

线缆规格	HPN	O.D. (mm)
2 AWG	725724	绝缘导线11.7 裸导线 6.7
1 AWG	725725	绝缘导线11.7 裸导线 6.7
1/0	725727	绝缘导线11.7 裸导线 6.7

压接端子

X-Ref 旧的 Husky 代码	Husky 代码	耳型铜端子规格	开孔尺寸	角度	HPN	Panduit #	压接工具	压模代码	压接信息
	D37 *	2 AWG	#10	直的	5801037	LCAX2-10-E	PANDUIT CT-3001	棕色 P33	线缆绝缘剥去长度 = 15 mm 压接数量 = 1
	D38			45°	5806787	LCAX2-10H-E			
	D39			90°	5801174	LCAX2-10F-E			
L26	D40 *		1/4"	直的	5801038	LCAX2-14-E			
	D41			45°	5806788	LCAX2-14H-E			
	D42			90°	5801180	LCAX2-14F-E			
L27	D43 *		5/16"	直的	5801039	LCAX2-56-E			
	D44			45°	5806789	LCAX2-56H-E			
	D45			90°	5801185	LCAX2-56F-E			
L28	D46 *		3/8"	直的	5801040	LCAX2-38-E			
	D47			45°	5806790	LCAX2-38H-E			
L36	D48 *			90°	5801186	LCAX2-38F-E			
L23,L29	D49 *		1/2"	直的	5801041	LCAX2-12-E			
	D50			45°	5806791	LCAX2-12H-E			
	D51			90°	5801187	LCAX2-12F-E			
	D52	1 AWG	#10	直的	5801050	LCAX1-10-X	PANDUIT CT-3001	绿色 P37	线缆绝缘剥去长度 = 17 mm 压接数量 = 1
	D53			45°	5806792	LCAX1-10H-X			
	D54			90°	5806560	LCAX1-10F-X			
L30	D55 *		1/4"	直的	5801051	LCAX1-14-X			
	D56			45°	5806793	LCAX1-14H-X			
	D57			90°	5806564	LCAX1-14F-X			
L31	D58 *		5/16"	直的	5801053	LCAX1-56-X			
	D59			45°	5806794	LCAX1-56H-X			
L32	D60 *			90°	5806566	LCAX1-56F-X			
L34	D61 *		3/8"	直的	5801055	LCAX1-38-X			
	D62			45°	5806795	LCAX1-38H-X			
L33	D63 *			90°	5806568	LCAX1-38F-X			
L77	D64 *		1/2"	直的	5801073	LCAX1-12-X			
	D65			45°	5806796	LCAX1-12H-X			
L35	D66 *			90°	5806569	LCAX1-12F-X			
L40	D67 *	1/0	1/4"	直的	5801074	LCAX1/0-14-X	PANDUIT CT-3001	粉红色 P42	线缆绝缘剥去长度 = 18 mm 压接数量 = 2
	D68			45°	5806797	LCAX1/0-14H-X			
	D69			90°	5806573	LCAX1/0-14F-X			
L41	D70 *		5/16"	直的	5801076	LCAX1/0-56-X			
	D71			45°	5806798	LCAX1/0-56H-X			
	D72			90°	5806623	LCAX1/0-56F-X			
L43	D73 *		3/8"	直的	5801077	LCAX1/0-38-X			
	D74			45°	5806799	LCAX1/0-38H-X			
L44	D75 *			90°	5806625	LCAX1/0-38F-X			
L45	D76 *		1/2"	直的	5801078	LCAX1/0-12-X			
	D77			45°	5806800	LCAX1/0-12H-X			
	D78 *			90°	5806626	LCAX1/0-12F-X			

非隔离端子

X-Ref 旧的 Husky 代码	Husky 代码	I.D. (mm)	长度 (mm)	HPN	Panduit #	压接工具	压模代码	压接数量
NF	UF10 *	8.3	18	5800967	F86-18	GREENLEE K28GL	2 AWG	2
	UF11 *		25	5800969	F86-25			2
	UF12 *		32	5800970	F86-32			3
NF	UF13 *	10.3	18	5800971	F87-18	PANDUIT CT-3001	CD-2001-F87	1
	UF14 *		25	5800973	F87-25			
	UF15 *		32	5800974	F87-32			
NF	UF13 *	10.3	18	5800971	F87-18	PANDUIT CT-3001	CD-2001-F87	1
	UF14 *		25	5800973	F87-25			
	UF15 *		32	5800974	F87-32			

SWI-2540 DLO Compression Lug Crimping Guidelines

SWI-2541 DLO Small Ferrule Crimping Guidelines

SWI-2542 DLO Large Ferrule Crimping Guidelines

SWI-2551 DLO Installation Guidelines

* = Bin Stock

HUSKY®

MACHINE MODEL
UNIVERSAL MASTER

	日期	日期	时间
日期	cfleetwo	12/21/2018	1:21:22 PM
批准			
检查.			
原始设计			

DESCRIPTION
DLO DETAILS

PROJECT	=WIRE	+
MACHINE	Sheet 3	Total 23
DRAWING NO. UNIVERSAL MASTER		

DLO 电缆			X-Ref 旧的 Husky 代码	压接端子									
线缆规格	HPN	O.D. (mm)		Husky 代码	耳型铜端子规格	开孔尺寸	角度	HPN	Panduit #	压接工具	压模代码	压接信息
2/0	725728	绝缘导线11.7 裸导线 6.7		D79	2/0	1/4"	直的	5801079	LCAX2/0-14-X	PANDUIT CT-3001	黑色 P45	线缆绝缘剥去长度 = 21 mm 压接数量 = 2
				D80			45°	5806802	LCAX2/0-14H-X			
				D81			90°	5806628	LCAX2/0-14F-X			
			L50,L82	D82 *		5/16"	直的	5801086	LCAX2/0-56-X			
				D83			45°	5806803	LCAX2/0-56H-X			
			L53	D84 *			90°	5806631	LCAX2/0-56F-X			
			L51	D85 *		3/8"	直的	5801088	LCAX2/0-38-X			
				D86			45°	5806804	LCAX2/0-38H-X			
			L52	D87 *			90°	5806632	LCAX2/0-38F-X			
			L83	D88 *		1/2"	直的	5801090	LCAX2/0-12-X			
				D89			45°	5806805	LCAX2/0-12H-X			
				D90 *			90°	5806633	LCAX2/0-12F-X			
3/0	725729	绝缘导线11.7 裸导线 6.7		D94	3/0	1/4"	直的	5801093	LCAX3/0-14-X	PANDUIT CT-3001	橙色 P50	线缆绝缘剥去长度 = 23 mm 压接数量 = 2
				D95			45°	5806807	LCAX3/0-14H-X			
				D96			90°	5806635	LCAX3/0-14F-X			
			L49,L79	D97 *		5/16"	直的	5801094	LCAX3/0-56-X			
				D98			45°	5806808	LCAX3/0-56H-X			
			L56	D99 *			90°	5806673	LCAX3/0-56F-X			
			L58	D100*		3/8"	直的	5801095	LCAX3/0-38-X			
				D101			45°	5806809	LCAX3/0-38H-X			
			L57	D102*			90°	5806676	LCAX3/0-38F-X			
			L80	D103*		1/2"	直的	5801097	LCAX3/0-12-X			
				D104			45°	5806811	LCAX3/0-12H-X			
				D105			90°	5806677	LCAX3/0-12F-X			
				D106		5/8"	直的	5801098	LCAX3/0-58-X			
				D107			45°	5806812	LCAX3/0-58H-X			
				D108*			90°	5806678	LCAX3/0-58F-X			
4/0	725730	绝缘导线11.7 裸导线 6.7		D109	4/0	1/4"	直的	5801100	LCAX4/0-14-X	PANDUIT CT-3001	紫色 P54	线缆绝缘剥去长度 = 26 mm 压接数量 = 2
				D110			45°	5806813	LCAX4/0-14H-X			
				D111			90°	5806682	LCAX4/0-14F-X			
			L61	D112*		5/16"	直的	5801101	LCAX4/0-56-X			
				D113			45°	5806814	LCAX4/0-56H-X			
				D114*			90°	5806684	LCAX4/0-56F-X			
			L62	D115*		3/8"	直的	5801121	LCAX4/0-38-X			
				D116			45°	5806815	LCAX4/0-38H-X			
			L63	D117*			90°	5806685	LCAX4/0-38F-X			
			L65,L81	D118*		1/2"	直的	5801122	LCAX4/0-12-X			
				D119			45°	5806816	LCAX4/0-12H-X			
			L64	D120*			90°	5806686	LCAX4/0-12F-X			
				D121		5/8"	直的	5801123	LCAX4/0-58-X			
				D122			45°	5806817	LCAX4/0-58H-X			
				D123			90°	5806688	LCAX4/0-58F-X			

X-Ref 旧的 Husky 代码	非隔离端子							
	Husky 代码	I.D. (mm)	长度 (mm)	HPN	Panduit #	压接工具	压模代码	压接数量
NF	UF16 *	12.5	25	5800976	F89-25	PANDUIT CT-3001	CD-2001-F89	1
	UF17 *		32	5800978	F89-32			
NF	UF18 *	14.5	25	5800979	F90-25	PANDUIT CT-3001	CD-2001-F90	1
	UF19 *		32	5800980	F90-32			
NF	UF20 *	16.5	32	5800995	F91-32	PANDUIT CT-3001	CD-2001-F91	1
	UF21 *		40	5800998	F91-40			

螺栓孔尺寸	
USA	公制
#10	M5
1/4"	M6
5/16"	M8
3/8"	M10
1/2"	M12
5/8"	M16

SWI-2540 DLO Compression Lug Crimping Guidelines

SWI-2541 DLO Small Ferrule Crimping Guidelines

SWI-2542 DLO Large Ferrule Crimping Guidelines

SWI-2551 DLO Installation Guidelines

* = Bin Stock

HUSKY®

MACHINE MODEL
UNIVERSAL MASTER

	日期	日期	时间
日期	cfleetwo	1/18/2019	1:56:37 PM
批准			
检查.			
原始设计			

DESCRIPTION
DLO DETAILS

PROJECT	=WIRE	+
MACHINE	Sheet 4	Total 23
DRAWING NO. UNIVERSAL MASTER		

DLO 电缆

线缆规格	HPN	O.D. (mm)
262 kcmil	725731	绝缘导线11.7 裸导线 6.7
313 kcmil	725732	绝缘导线11.7 裸导线 6.7
373 kcmil	2568920	绝缘导线11.7 裸导线 6.7

压接端子

X-Ref 旧的 Husky 代码	Husky 代码	耳型铜端子规格	开孔尺寸	角度	HPN	Panduit #	压接工具	压模代码	压接信息
L66	D124*	262 kcmil	5/16"	直的	5801125	LCAX250-56-X	PANDUIT CT-3001	黄色 P62	线缆绝缘剥去长度 = 26 mm 压接数量 = 2
	D125			45°	5806819	LCAX250-56H-X			
	D126			90°	5806689	LCAX250-56F-X			
L67	D127*		3/8"	直的	5801128	LCAX250-38-X			
	D128			45°	5806820	LCAX250-38H-X			
L69	D129*			90°	5806724	LCAX250-38F-X			
	D130*		1/2"	直的	5801129	LCAX250-12-X			
	D131			45°	5806821	LCAX250-12H-X			
L68	D132*			90°	5806725	LCAX250-12F-X			
	D133		5/8"	直的	5801130	LCAX250-58-X			
	D134			45°	5806822	LCAX250-58H-X			
	D135			90°	5806727	LCAX250-58F-X			
L78	D136*	313 kcmil	3/8"	直的	5801131	LCAX300-38-6	PANDUIT CT-3001	红色 P71	线缆绝缘剥去长度 = 30 mm 压接数量 = 2
	D137			45°	5806823	LCAX300-38H-6			
	D138			90°	5806731	LCAX300-38F-6			
L71	D139*		1/2"	直的	5801132	LCAX300-12-6			
	D140			45°	5806824	LCAX300-12H-6			
	D141			90°	5806734	LCAX300-12F-6			
	D142		5/8"	直的	5801134	LCAX300-58-6			
	D143			45°	5806825	LCAX300-58H-6			
	D144			90°	5806735	LCAX300-58F-6			
L307	D145*	373 kcmil	3/8"	直的	5801135	LCAX350-38-6	PANDUIT CT-3001	蓝色 P76	线缆绝缘剥去长度 = 33 mm 压接数量 = 2
	D146			45°	5806827	LCAX350-38H-6			
	D147			90°	5806737	LCAX350-38F-6			
	D148*		1/2"	直的	5801136	LCAX350-12-6			
	D149			45°	5806829	LCAX350-12H-6			
	D150			90°	5806741	LCAX350-12F-6			
	D151		5/8"	直的	5801137	LCAX350-58-6			
	D152			45°	5806830	LCAX350-58H-6			
	D153			90°	5806742	LCAX350-58F-6			

非隔离端子

X-Ref 旧的 Husky 代码	Husky 代码	I.D. (mm)	长度 (mm)	HPN	Panduit #	压接工具	压模代码	压接数量
	UF20 *	16.5	32	5800995	F91-32	PANDUIT CT-3001	CD-2001-F91	1
	UF21 *		40	5800998	F91-40			
	UF22 *	18.5	32	5801000	F92-32	PANDUIT CT-3001	CD-2001-F92	1
	UF23 *		38	5801002	F92-38			
	UF24 *	20.0	32	5801006	F93-32	PANDUIT CT-3001	CD-2001-F93	1
	UF25 *		40	5801008	F93-40			

SWI-2540 DLO Compression Lug Crimping Guidelines

SWI-2541 DLO Small Ferrule Crimping Guidelines

SWI-2542 DLO Large Ferrule Crimping Guidelines

SWI-2551 DLO Installation Guidelines

螺栓孔尺寸	
USA	公制
#10	M5
1/4"	M6
5/16"	M8
3/8"	M10
1/2"	M12
5/8"	M16

* = Bin Stock

VL 断路器 (3极)

* = 断路器板背后压接端子

断路器		断路器 端子			安装螺钉		非隔离端子					柔性母排				压接端子 / 铜排			
类型	规格(A)	类型	HPN	# of Conn.	扭矩 lb-in	扭矩 N-m	AWG	剥皮 (mm)	AWG	扭矩 lb-in	扭矩 N-m	最大 宽度 (mm)	厚度 (mm)	扭矩 lb-in	扭矩 N-m	最大 宽度 (mm)	螺栓 规格	扭矩 lb-in	扭矩 N-m
VL150X CG	20-150	3VL9120-4TC31	5990365	1	N/A		14 - 1/0	15	14 - 8	35	4	9	3 - 6	71	8	N/A			
									6 - 1/0	71	8								
		3VL9100-4TA31	6008067	1			N/A					N/A				15	M6	53	6
VL150 DG	50-150	3VL9220-4TC31	5990367	1	N/A		8 - 2/0	15	8	35	4	9	3 - 6	71	8	N/A			
									6 - 2/0	71	8								
		3VL9202-4TP01	6340908	1	44	5	14 - 4	13	14 - 8	35	4	N/A							
		3VL9202-4TP31	6891125	1				22	6 - 1	62	7								
				1				32											
		3VL9200-4TA31	6008055	1	N/A		N/A					N/A				15	M6	53	6
VL250 FG	100-250	3VL9335-4TC31	5990417	1	N/A		2 - 313	22	2 - 313	221	25	15	4 - 10	221	25	N/A			
		3VL9302-4TP01	5633246	1	44	5	14 - 2	15	14 - 8	44	5	N/A							
		3VL9302-4TP31	6891082	1				25	6 - 1/0	137	15.5								
				1			12 - 1/0	42											
		3VL9300-4TA31	6008057	1	N/A		N/A					N/A				20	M8	89	10
		3VL9300-4EC30	8772739	1*	89	10	N/A					N/A				20	M10	177	20
VL400 JG	250-400	3VL9460-4TC31	5990442	1	N/A		1/0 - 373	36	1/0 - 373	310	35	25	3 - 10	310	35	N/A			
		3VL9400-4TA31	6008058	1			N/A					N/A				25	M8	133	15
		3VL9400-4TA51	7044242																
		3VL9460-4TF30	7404990	1	133	15	2/0 - 373	25	2/0 - 373	372	42	N/A				N/A			
				1				50											
		3VL9475-4TD31	5954893	1			3/0 - 373	27	3/0 - 262	275	31								
	Shared								313 - 373	500	56.5								
		3VL9402-4TP01	4581830	2			14 - 1/0	16	14 - 10	35	4								
		3VL9402-4TP31	6895293	2				32	8	40	4.5								
				2				32	6 - 1/0	120	13.5								
		3VL9400-4EC30	8772381	1*	133	15	N/A					N/A				25	M10	177	20
VL400X LG	400-600	3VL9460-4TA31	6008060	1	N/A		N/A					N/A				25	M10	221	25
		3VL9460-4TA51	7044290																
VL800 MG	600-800	3VL9650-4TG31	5832899	1	133	15	4/0 - 373	25	4/0 - 373	375	42.4	N/A				N/A			
				2				50											
		HUSKY	6528772	1	N/A		N/A									30	M10	221	25
		3VL9600-4TA31	6167324	1	N/A		N/A									40	M8 (x2)	212	24

VL 断路器 (4极)

断路器		断路器 端子			非隔离端子					柔性母排				压接端子 / 铜排			
类型	规格(A)	类型	HPN	# of Conn.	AWG	剥皮 (mm)	扭矩 AWG	扭矩 lb-in	扭矩 N-m	最大 宽度 (mm)	厚度 (mm)	扭矩 lb-in	扭矩 N-m	最大 宽度 (mm)	螺栓 规格	扭矩 lb-in	扭矩 N-m
VL160N DG	40-160	3VL9200-4TC40	6083118	1	14 - 1/0	21	14 - 8	35	4	9	3 - 6	71	8	N/A			
							6 - 1/0	71	8								
		3VL9216-4TA40	6008064	1	N/A					N/A				15	M6	53	6
VL250N FG	160-250	3VL9300-4TC40	6083119	1	4 - 4/0	24	4 - 4/0	106	12	15	4 - 10	106	12	N/A			
		3VL9300-4TA40	6008065	1	N/A					N/A				20	M8	89	10
VL400N JG	160-400	3VL9400-4TC40	6083120	1	1 - 373	28	1 - 373	221	25	25	3 - 10	221	25	N/A			
		3VL9400-4TA40	6008066	1	N/A					N/A				25	M8	133	15

Wire规格	
AWG	mm²
26	0.14
24	0.25
22	0.34
20	0.5
19	0.75
18	1.0
16	1.5
14	2.5
12	4
10	6
8	10
6	16
4	25
2	35
1	50

STUD SIZE	
USA	公制
#2	M2
#4	M2.5
#5	M3
#6	M3.5
#8	M4
#10	M5
1/4"	M6
5/16"	M8
3/8"	M10
7/16"	M11
1/2"	M12
5/8"	M16

参考HS252力矩标准

分配块

供应商	零件#	HPN	定位		# of Conn.	AWG	剥皮 (mm)	扭矩 AWG	扭矩 lb-in	扭矩 N-m
Cooper Bussman	PDBFS330	5626032	Line		1	6 - 373	32	6 - 373	500	56.5
			Load	Row 1	3	14 - 4	30	6 - 4	45	5.1
				Row 2	3		15	8	40	4.5
								14 - 10	35	4
	PDBFS377	6197174	Line		2	4 - 262	30	4 - 262	275	31
							36			
			Load	Row 1	4	14 - 6	32	6	35	4
				Row 2	4		26	8	25	2.8
				Row 3	4		15	14 - 10	20	2.3
	PDBFS504	8884605	Line / Load		2	1/0 - 373	32	1/0 - 373	500	56.5
	16330-1	746714	Line		1	6 - 373	28	6 - 373	500	56.5
			Load	Row 1	3	14 - 4	27	6 - 4	45	5.1
				Row 2	3		12	8	40	4.5
								14 - 10	35	4
	16370-1 16370-3	2801159 72277	Line		1	6 - 313	25	6 - 313	275	31
			Load	Row 1	4	14 - 6	25	6	35	4
				Row 2	4		16	8	25	2.8
				Row 3	4		12	14 - 10	20	2.3
	16371-1 16371-3	5002820 2246870	Line		1	6 - 313	25	6 - 313	275	31
			Load	Row 1	3	14 - 2	25	* 14 - 2	120	13.5
				Row 2	3	14 - 6	16	6 - 4	45	5.1
				Row 3	3		12	8	40	4.5
								14 - 10	35	4
	16377-2 16377-3	4162385 4155603	Line	Row 1	1	4 - 4/0	25	4 - 4/0	275	31
				Row 2	1		32			
			Load	Row 1	4	14 - 6	25	6	35	4
				Row 2	4		16	8	25	2.8
				Row 3	4		12	14- 10	20	2.3
	16528-1 16528-3	3007511 2466523	Line		2	2 - 373	45	2 - 373	500	56.5
			Load	Row 1	2	6 - 2/0	32	* 6 - 2/0	120	13.5
					2	14 - 6		6	35	4
				Row 2	2	6 - 2/0	16	8	25	2.8
					2	14 - 6		14 - 10	20	2.3

* 更大的端接螺钉

分配块

供应商	零件#	HPN	定位		# of Conn.	AWG	剥皮 (mm)	扭矩 AWG	扭矩 lb-in	扭矩 N-m
Weidmueller	1028500000	7942923	Line		1	M10	N/A	N/A	133	15
			Load		1					
Marathon	1333575CH	8235602	Line		1	2 - 373	40	6 - 373	375	42.4
			Load	Row 1	2	14 - 1	32	6 - 1	120	13.5
				Row 2	2		16	8	40	4.5
								14 - 10	35	4
Ferraz Shawmut	63131	7147588	Line		1	14 - 1/0	17	6 - 1/0	120	13.5
								14 - 8	50	5.6
			Load	Row 1	2	14 - 6	22	6	35	4
				Row 2	2		10	8	25	2.8
								10 - 14	20	2.3

参考HS252力矩标准

HUSKY®

MACHINE MODEL
UNIVERSAL MASTER

	日期	日期	时间
日期	cfleetwo	12/13/2019	9:28:32 AM
批准			
检查.			
原始设计			

DESCRIPTION
DLO DEVICE DETAILS

PROJECT	=WIRE	+
MACHINE		
DRAWING NO. UNIVERSAL MASTER	Sheet 8	Total 23

接触器

供应商	尺寸	零件#	HPN	# of Conn.	套圈 AWG	套圈 剥皮 (mm)	柔性母排 最大 宽度 (mm)	柔性母排 厚度 (mm)	LUG端子/母排 端子 最大尺寸	LUG端子/母排 螺栓 规格	扭矩 lb-in	扭矩 N-m
Siemens	S2 3RT203	附上BOX LUGS		1	18 - 2	13	N/A		N/A		35	4
				2	18 - 4							
	S3 3RT204	附上BOX LUGS		1	14 - 1	17	9	2.4 - 4.8	N/A		44	5
				2	14 - 2							
		不带 BOX LUGS			N/A		N/A		15	M6		
	S6 3RT105	3RT1955-4G	2600404	1	6 - 2/0	20	15.5	2.4 - 4.8	N/A		97	11
				2	6 - 1/0							
		3RT1956-4G	2600407	1	6 - 262	20	15.5	2.4 - 8				
				2	6 - 3/0							
		不带 BOX LUGS			N/A		N/A		17	M8		
	S10 3RT106	3RT1966-4G	2600408	1	3/0-373	27	24	4.8 - 10	N/A		177	20
				2	2/0-373							
		不带 BOX LUGS			N/A		N/A		25	M10		
	S12 3RT107	3RT1966-4G	2600408	1	3/0-373	27	24	4.8 - 10	N/A		177	20
				2	2/0-373							
		不带 BOX LUGS			N/A		N/A		25	M10		

Wire规格 AWG	mm²
26	0.14
24	0.25
22	0.34
20	0.5
19	0.75
18	1.0
16	1.5
14	2.5
12	4
10	6
8	10
6	16
4	25
2	35
1	50

过载继电器

供应商	尺寸	零件#	HPN	# of Conn.	套圈 AWG	套圈 剥皮 (mm)	LUG端子/母排 端子 最大尺寸	LUG端子/母排 螺栓 规格	扭矩 lb-in	扭矩 N-m
Siemens	S2 3RU213	附上BOX LUGS		1	18 - 2	13	N/A		35	4
				2	18 - 4					
	S3 3RU214	附上BOX LUGS		1	14 - 1	17	N/A		44	5
				2	14 - 2					
	S6 3RB205	RT1955-4G	2600404	1	6 - 2/0	20	N/A		97	11
				2	6 - 1/0					
		RT1956-4G	2600407	1	6 - 262	20				
				2	6 - 3/0					
		不带 BOX LUGS			N/A		15	M8		
	S10 3RB206	RT1966-4G	2600408	1	3/0 - 373	27	N/A		177	20
				2	2/0 - 373					
		不带 BOX LUGS			N/A		25	M10		

STUD SIZE USA	公制
#2	M2
#4	M2.5
#5	M3
#6	M3.5
#8	M4
#10	M5
1/4"	M6
5/16"	M8
3/8"	M10
7/16"	M11
1/2"	M12
5/8"	M16

参考HS252力矩标准

电动机起动保护器

供应商	尺寸	零件#	HPN	# of Conn.	套圈 AWG	套圈 剥皮 (mm)	LUG端子/母排 端子最大尺寸	LUG端子/母排 螺栓规格	扭矩 lb-in	扭矩 N-m
Siemens	S2 3RV203	附上BOX LUGS		1	18 - 2	13	N/A		35	4
				2	18 - 4					
	S3 3RV204 3RV274	附上BOX LUGS		1	14 - 1	17	N/A		44	5
				2	14 - 2					
		不带 BOX LUGS			N/A		15	M6		

机器/模具加热

供应商	类型	零件#	HPN	# of Conn.	套圈 AWG	套圈 剥皮 (mm)	LUG端子/母排 端子最大尺寸	LUG端子/母排 螺栓规格	扭矩 lb-in	扭矩 N-m
Siemens	5SY4	(1,2,3)-Pole		2	14 - 4	15	N/A		27	3
	SITOP	6EP1437-3BA10 6EP4137-3AB00	8098974 7829488	2	14 - 6	12			11	1.2
Wohner	AES-CC	31298 31299 31300	4985144 4985089 4986413	1	14 - 8	11			20	2.3
					6 - 4				25	2.8
	CTB-T35	31550	4985169	1	10 - 1/0	15			50	5.6
ABA	6 Slot	ICC3.2	7869129	1	N/A		15	M5	20	2.3

PE 连接

供应商	零件#	HPN	# of Conn.	AWG	剥皮 (mm)	螺栓规格	扭矩 lb-in	扭矩 N-m
Brumall	1024-R0	2172625	1	6 - 262	22	N/A	375	42.4
			24	8	10		40	4.5
				14 - 10			35	4
Hoffman	10 Hole PE busbar	2617195	8	N/A		M8	89	10
			2			M10	177	20
	6 Hole PE busbar	3086616	3	N/A		M8	89	10
			3			M10	177	20
	PE stud	N/A	1	N/A		M6	20	2.3

母排连接适配器

供应商	零件#	HPN	# of Conn.	AWG	Max Busbar (mm)	剥皮 (mm)	扭矩 lb-in	扭矩 N-m
Wohner	01069	6251136	1	N/A	32 x 10	35	133	15
	01538	5960823	1	N/A	32 x 20	45	266	30
	01537	6529891	1	3/0 - 373	N/A	45	266	30
	01147	7861105	1	3/0 - 373	N/A	45	266	30
	01240	6679232	1	10 - 2/0	N/A	25	80	9
	01243	6257177	1	6 - 4/0	N/A	25	120	13.5
	32146	8010682	2	12 - 6	N/A	15	27	3

母线安装适配器

	零件#	HPN	# of Conn.		扭矩 lb-in	扭矩 N-m		扭矩 lb-in	扭矩 N-m
Wohner	32976	5945274	1	安装螺钉	71	8	线侧管	71	8
	32977	5960821	1		71	8		89	10
	32975	5960822	1		106	12		221	25
	32578	7851456	1		71	8		80	9
	32579	7851457	1		106	12		177	20
	32981	6077583	1		1.8	0.2	Preinstalled 4 AWG wire leads		

参考HS252力矩标准

HUSKY®

MACHINE MODEL
UNIVERSAL MASTER

	日期	日期	时间
日期	cfleetwo	4/7/2020	9:44:16 AM
批准			
检查.			
原始设计			

DESCRIPTION
DLO DEVICE DETAILS

PROJECT
MACHINE
DRAWING NO.
UNIVERSAL MASTER

=WIRE +

Sheet 10 Total 23

线性滤波器

供应商	零件#	HPN	尺寸	电源连接 max. AWG	电源连接 剥皮 (mm)	电源连接 螺栓规格	电源连接 扭矩 lb-in	电源连接 扭矩 N-m	PE 连接 螺栓规格	PE 连接 扭矩 lb-in	PE 连接 扭矩 N-m
BAUMULLER (A211)	BFN 3-1-030-001	2351717	30A	8	9	N/A	9	1	M5	18	2
	BFN 3-1-042-001	2351719	42A								
	BFN 3-1-056-001	2351721	56A	6	10		15	1.7	M6	35	4
	BFN 3-1-075-001	2351722	75A	4	19		35	4			
	BFN 3-1-100-001	2351723	100A	1	24		62	7	M10	53	6
	BFN 3-1-130-001	2351724	130A								
	BFN 3-1-180-001	2351726	180A	3/0	27		142	16			
	BFN 3-1-250-001	4683445	250A	N/A		M10	142	16		142	16
	BFN 3-1-270-001	2620271	270A			M12	221	25		53	6
	BFN 3-1-320-001	4570913	320A			M10	142	16	同电源连接		
	BFN 3-1-400-001	4684162	400A								
	BFN 3-1-600-001	4684158	600A								
SIEMENS (A211)	6SL3203-0BE31-1BA0	7375741	37kW	2	24	N/A	62	7	M10	89	10
	6SL3203-0BE32-5AA0	6884295	132kW	N/A		M10	221	25	N/A		

Wire规格 AWG	mm²
26	0.14
24	0.25
22	0.34
20	0.5
19	0.75
18	1.0
16	1.5
14	2.5
12	4
10	6
8	10
6	16
4	25
2	35
1	50

STUD SIZE USA	公制
#2	M2
#4	M2.5
#5	M3
#6	M3.5
#8	M4
#10	M5
1/4"	M6
5/16"	M8
3/8"	M10
7/16"	M11
1/2"	M12
5/8"	M16

参考HS252力矩标准

线性电抗器

				电源连接					PE 连接		
供应商	零件#	HPN	尺寸	max. AWG	剥皮 (mm)	螺栓规格	扭矩 lb-in	扭矩 N-m	螺栓规格	扭矩 lb-in	扭矩 N-m
BAUMULLER (A218)	BK3-0040/0050-001	6344019	40A	N/A		M6	53	6	同电源连接		
	BK3-0065/0080-001	5831222	65A								
	BK3-0080/0100-001	5831202	80A			M8	106	12			
	BK3-0115/0140-001	4922039	115A			M10	133	15	M8	106	12
	BK3-0165/0200-001	4684155	165A								
	BK3-0195/0240-001	4921887	195A								
	BK3-0275/0340-001	4121316	275A								
	BK3-0365/0450-001	4420121	365A			M12	177	20			
	BK3-0450/0550-001	4922113	450A								
	BK3-0615/0750-001	4684150	615A								
	DR3-50-4-0200-001	2602507	200A	N/A		M10	133	15	M8	106	12
	DR3-50-4-0300-001	2683433	300A								
	DR3-50-4-0400-001	2602511	400A			M12	177	20	M10	133	15
SIEMENS (A194)	6SL3000-0DE21-6AA0	4858572	16 kW	6	14	N/A	11	1.2	同电源连接		
	6SL3000-0DE23-6AA0	4858565	36 kW	2	19		22	2.5			
	6SL3000-0DE25-5AA1	3687230	55 kW	1/0	24		62	7			
	6SL3000-0DE28-0AA1	4858569	80 kW	4/0	35		弹簧夹		M10	221	25
	6SL3000-0DE31-2AA1	4858567	120 kW								

Wire规格	
AWG	mm²
26	0.14
24	0.25
22	0.34
20	0.5
19	0.75
18	1.0
16	1.5
14	2.5
12	4
10	6
8	10
6	16
4	25
2	35
1	50

STUD SIZE	
USA	公制
#2	M2
#4	M2.5
#5	M3
#6	M3.5
#8	M4
#10	M5
1/4"	M6
5/16"	M8
3/8"	M10
7/16"	M11
1/2"	M12
5/8"	M16

参考HS252力矩标准

有效接口模块

供应商	零件#	HPN	尺寸	电源连接 max. AWG	电源连接 剥皮 (mm)	电源连接 螺栓规格	电源连接 扭矩 lb-in	电源连接 扭矩 N-m	PE 连接 螺栓规格	PE 连接 扭矩 lb-in	PE 连接 扭矩 N-m
SIEMENS (A195)	6SL3100-0BE21-6AB0	4959543	16 kW	6	14	N/A	15	1.7	M8	115	13
	6SL3100-0BE23-6AB0	5854353	36 kW	1/0	24		53	6			
	6SL3100-0BE25-5AB0	4021256	55 kW								
	6SL3100-0BE28-0AB0	4021251	80 kW	N/A		M8	115	13			
	6SL3100-0BE31-2AB0	4021250	120 kW								

进线模块

供应商	零件#	HPN	尺寸	电源连接 max. AWG	电源连接 剥皮 (mm)	电源连接 螺栓规格	电源连接 扭矩 lb-in	电源连接 扭矩 N-m	PE 连接 螺栓规格	PE 连接 扭矩 lb-in	PE 连接 扭矩 N-m
SIEMENS (A20)	6SL3130-7TE21-6AA4	4959545	16 kW	8	12	N/A	15	1.7	M5	27	3
	6SL3130-7TE23-6AA3	5682121	36 kW	N/A		M6	53	6	M6	53	6
	6SL3130-7TE25-5AA3 6SL3131-7TE25-5AA3	5808068 7260842	55 kW			M8	115	13			
	6SL3130-7TE28-0AA3 6SL3131-7TE28-0AA3	3890439 6849701	80 kW						M8	115	13
	6SL3130-7TE31-2AA3 6SL3131-7TE31-2AA3	3869320 6849702	120 kW								
	6SL3162-2BM01-0AA0	3869348	DC link	4/0	25	N/A	115	13	母线螺丝 (1.8 Nm)		

Wire规格	
AWG	mm²
26	0.14
24	0.25
22	0.34
20	0.5
19	0.75
18	1.0
16	1.5
14	2.5
12	4
10	6
8	10
6	16
4	25
2	35
1	50

STUD SIZE	
USA	公制
#2	M2
#4	M2.5
#5	M3
#6	M3.5
#8	M4
#10	M5
1/4"	M6
5/16"	M8
3/8"	M10
7/16"	M11
1/2"	M12
5/8"	M16

参考HS252力矩标准

伺服驱动

				电源连接					PE 连接		
供应商	零件#	HPN	尺寸	max. AWG	剥皮 (mm)	螺栓规格	扭矩 lb-in	扭矩 N-m	螺栓规格	扭矩 lb-in	扭矩 N-m
BAUMULLER (209)	BM4435	8425223	60A	4	16	N/A	18	2	同电源连接		
	BM4443	8425143	80A	1	24	N/A	62	7			
	BM4444	8098421	100A								
	BM4445	8098423	130A								
	BM4446	8098425	150A								
	BM4453	8098510	150A	N/A		M8	106	12			
	BM4454	8098511	210A								
	BM4462	8098635	250A			M10	133	15			
	BM4463	8098636	300A								
	BM4466	8098637	350A								
	BM4472	8098684	450A								
	BM4473	8098685	594A								
SIEMENS (A23) (A235) (A41, A42) (A55)	6SL3120-1TE24-5AA3 6SL3121-1TE24-5AA3	3869422 7260827	45 A	N/A		M6	53	6	M6	53	6
	6SL3120-1TE26-0AA3 6SL3121-1TE26-0AA3	4870136 6849696	60 A								
	6SL3120-1TE28-5AA3 6SL3121-1TE28-5AA3	4054901 6849698	85 A			M8	115	13		115	13
	6SL3120-1TE31-3AA3 6SL3121-1TE31-3AA3	4054899 6849699	132 A						M8		
	6SL3120-1TE32-0AA4 6SL3121-1TE32-0AA4	3869421 6849700	200 A								
	6SL3210-1PE27-5UL0	7251771	37 kW	2	18	N/A	35	4	同电源连接		FSD
	6SL3210-1PE31-1UL0	7251769	55 kW	2/0	25	N/A	80	9			FSE
	6SL3210-1PE31-8UL0	7162332	90 kW	N/A		M10	212	24			FSF
	6SL3210-1PE32-5UL0	6852710	132 kW								

Wire规格	
AWG	mm²
26	0.14
24	0.25
22	0.34
20	0.5
19	0.75
18	1.0
16	1.5
14	2.5
12	4
10	6
8	10
6	16
4	25
2	35
1	50

STUD SIZE	
USA	公制
#2	M2
#4	M2.5
#5	M3
#6	M3.5
#8	M4
#10	M5
1/4"	M6
5/16"	M8
3/8"	M10
7/16"	M11
1/2"	M12
5/8"	M16

参考HS252力矩标准

伺服马达

				电源连接					PE 连接			
供应商	零件#	HPN	电机尺寸	max. AWG	剥皮 (mm)	螺栓规格	扭矩 lb-in	扭矩 N-m	螺栓规格	扭矩 lb-in	扭矩 N-m	进线电缆 Ø
BAUMULLER	DS2-100BO54W-30-5	8012949	100	4	18	N/A	40	4.5	M8	53	6	M40 x 1 M16 x 1
	DS2-100BO54W-20-5	8135668										
	DS2-100BO54W-20-5	8008540		N/A		M8	53	6	同电源连接			M40 x 1 M25 x 1
	DS2-100LO54W-20-5	8008538										
	DS2-100MO54W-30-5	8008338										M40 x 2 M25 x 2
	DS2-100BO54W-30-5	8008351										
	DS2-100KO54W-30-5	8008324										
	DS2-100LO54W-30-5	8008350										
	DS2-132MO54W-20-5	8025038	132									M40 x 2 M25 x 1
	DS2-132ML54W-30-5	8010220				M10	89	10				M63 x 2 M25 x 1
	DS2-132BO54W-30-5	8012942										
	DS2-132BO54W-30-5	8008353										M63 x 4 M25 x 2
	DS2-132LO54W-30-5	8008354										
	DS2-132MO54W-30-5	8008356										
	DS2-132ML54W-30-5	8008355										
	DS2-132MO54W-30-5	8012948										M50 x 2 M16 x 1

Wire规格	
AWG	mm²
26	0.14
24	0.25
22	0.34
20	0.5
19	0.75
18	1.0
16	1.5
14	2.5
12	4
10	6
8	10
6	16
4	25
2	35
1	50

STUD SIZE	
USA	公制
#2	M2
#4	M2.5
#5	M3
#6	M3.5
#8	M4
#10	M5
1/4"	M6
5/16"	M8
3/8"	M10
7/16"	M11
1/2"	M12
5/8"	M16

参考HS252力矩标准

伺服马达

				电源连接					PE 连接			
供应商	零件#	HPN	电机尺寸	max. AWG	剥皮 (mm)	螺栓规格	扭矩 lb-in	扭矩 N-m	螺栓规格	扭矩 lb-in	扭矩 N-m	进线电缆 Ø
BAUMULLER	DS2-160BO54W-30-5	8008357	160	N/A		M10	89	10	同电源连接			64 x 4 25.5 x 2
	DS2-160LO54W-30-5	8008358										
	DS2-160MO54W-30-5	8008366										
	DS2-160LO54W-30-5	8012946										64 x 2 25.5 x 1
	DS2-160BO54W-30-5	8012947										
	DS2-160KO54W-30-5	8012944										64 x 1 25.5 x 1
	DS2-160MO54W-30-5	8012945										
	DS2-200LO54W-27-5	8020273	200									51 x 4 16.5 x 1
	DS2-200MO54W-27-5	8020002										

Wire规格	
AWG	mm²
26	0.14
24	0.25
22	0.34
20	0.5
19	0.75
18	1.0
16	1.5
14	2.5
12	4
10	6
8	10
6	16
4	25
2	35
1	50

泵电机

Data Sheets

			电源连接					PE 连接				
供应商	HP	# of Conn.	AWG	剥皮 (mm)	螺栓规格	扭矩 lb-in	扭矩 N-m	AWG	剥皮 (mm)	扭矩 lb-in	扭矩 N-m	进线电缆 Ø
EMOD	20 - 60	6	N/A		M8	53	6	10 - 1/0	20	71	8	Pg13 x 7 Pg11 x 2
	60 - 100											Pg16 x 7 Pg11 x 2
	100 - 125	6			M10	89	10	1 - 373				Pg21 x 7 Pg11 x 2
	125 - 150	6			M12	137	15.5					
	200 - 250	6	4 - 4/0	35	N/A	Cage Clamp *		同电源连接				M40 x 7 M20 x 1
	200 - 600	12										M32 x 13 M20 x 1

* WAGO类型285-195 -> 使用空DLO (没有端子)

STUD SIZE	
USA	公制
#2	M2
#4	M2.5
#5	M3
#6	M3.5
#8	M4
#10	M5
1/4"	M6
5/16"	M8
3/8"	M10
7/16"	M11
1/2"	M12
5/8"	M16

参考HS252力矩标准

CLASS A --> Electrical threaded connections (>30A)	
#	Connection Type
1	DLO Conductors
2	Non DLO Conductors (>=8AWG)
3	Flexible Busbars
4	Busbar Connection / Mounting Adaptors
5	Comb-Type Busbars
6	Main Breaker Lug Mounting Bolts

CLASS A NOTES:

All Class A connections shall use Torque Record Report

CLASS A TORQUE RECORD REPORT
Lookup torque values must be predefined prior to assembly
Operator to record name for each torqued connection point
Inspector to record name for each verification point
This report is a CTQ supplier deliverable
This report will be available for post build reference
Refer to SWI-2551

Torque value reference:

1. Husky DLO Tables
2. HS252
3. Specials -> OEM installation guide

CLASS B --> Electrical threaded connections (<=30A)	
#	Connection Type
1	Non DLO Conductors (<=10AWG)
2	Distribution Blocks (load side)
3	5SY Circuit Breakers
4	AES-CC Fuse holders
5	Control Transformers *
6	DC power supplies *
7	Buffer Module *
8	RV surge suppressors *
9	Outlets *
10	Control Relays *
11	Heat Exchangers *
12	Grounding Studs
13	Bonding Straps

CLASS B NOTES:

All Class B connections shall be tightened and tug tested

* Future design change to spring cage terminals

CLASS C --> Device Mounting	
#	Mounting Type
1	Busbar supports
2	Busbar Adaptors
3	Breakers
4	Breaker Handles
5	Distribution Blocks
6	Contactors
7	Line Filters
8	Line Reactors
9	Servo Drives
10	Heat Sink
11	Solid State Relays
12	Altanium Components
13	IPC / Battery
14	Din Rail
15	Wire Duct
16	Connector bulkheads / hoods
17	Strain Relieves / Gland Plates
18	Enclosure - Accessories
19	Adaptor plates
20	Current Transformers